SHOWBIZ PIZZA PLACE®

SPECIFICATIONS

CONFIDENTIAL OPERATIONS MANUAL #_____

SHOWBIZ PIZZA PLACE

OPERATIONS MANUAL

PREFACE

The ShowBiz Pizza Place, Inc. Confidential Operations Manual contains the required minimum standards, procedures, rules, regulations, policies, and techniques of the ShowBiz Pizza Place System, which are subject to change, amendment, or supplement from time to time by ShowBiz Pizza Place, Inc. This manual has been established to supplement and carry out the provisions of the license agremeent granted by ShowBiz Pizza Place, Inc. ShowBiz Pizza Place, Inc. has the responsibility and authority to insure compliance with the standards and grant exceptions as deemed appropriate and in the best interest of the ShowBiz Pizza Place System.

Strict adherence to all elements of the Confidential Operations Manual is necessary, essential, and required to maintain the System's high standards of quality and service and associated goodwill. All restaurants must comply with and maintain these standards at a level equal to or greater than the standards required in the Confidential Operations Manual. ShowBiz Pizza Place system restaurants are subject to identical standards. Violation of any of these standards shall be deemed a substantial and material violation of the franchisee agreement with ShowBiz Pizza Place, Inc.

NOTE: IN ALL INSTANCES STATE, LOCAL AND FEDERAL LAWS TAKE PRECEDENT OVER SHOWBIZ PIZZA PLACE POLICIES AND PROCEDURES. IF CONFLICTS ARE ENCOUNTERED, CONTACT THE DISTRICT MANAGER OR FRANCHISE REPRESENTATIVE IMMEDIATELY.

The Confidential Operations Manual is the property of ShowBiz Pizza Place, Inc., and shall be used and maintained in confidence. Additions and modifications will automatically be sent to the Manual holders in order to keep the Confidential Operations Manual up-to-date.

Questions regarding the Confidential Operations Manual may be referred to the ShowBiz Pizza Place, Inc. Quality Assurance Department at:

SHOWBIZ PIZZA PLACE, INC.
Quality Assurance Department
4441 West Airport Freeway
Irving, Texas 75062
U.S.A.

SPECIFICATION MANUAL - NUMERICAL INDEX

Number	Procedure Name
11500	Almonds
11501	Alfalfa Sprouts
11505	AuJus
11510	Bacon Bits
11511	Bean Sprouts
11512.02	Beef Roast
11512.03	Beef Topping - Pizza
11513	Beets - Sliced
11514	Breadsticks
11515	Broccoli
11516.01	Bun - Hot Dog
11516.02	Bun - French Roll
11516.03	Bun - Sesame Seed
11520	Cabbage, Red
11521.01	Cake - Chocolate
11521.02	Cake - Walnut
11523	Carrots
11524	Catsup
11525	Cauliflower
11526	Celery
11527.01	Cheese - American
11527.02	Cheese - Blend
11527.03	Cheese - Cheddar - Pizza
11527.04	Cheese - Cottage
11527.05	Cheese - Mozzarella
11527.06	Cheese - Parmesan
11527.07	Cheese - Provolone
11527.08	Cheese - Swiss
11527.09	Cheese - Cheddar Cheese Sauce
11528	Chow Mein Noodles
11529.01	Coffee
11529.02	Coffee - Decaffeinated
11529.03	Coffee - Creamer
11530	Corn
11531	Croutons
11532	Cucumbers
11540	Dough Mix
11541.01	Dressing - Blue Cheese
11541.02	Dressing - French
11541.03	Dressing - Italian
11541.04	Dressing - Thousand Island
11541.05	Dressing - House
11541.06	Dressing - Low Calorie
11550	Egg
11560	Flossugar
11561	Flour
11563	Fudge Brownies

Number	Procedure Name
11570	Garbanzo
11571	Green Peppers
11580	Ham
11581	Hot Dog
11590.01	Ice Cream Cone
11590.02	Ice Cream Mix
11595	Jalapeno
11596	Kale
11600	Lettuce
11610	Macaroni Salad
11611	Margarine
11612	Milk
11614	Mushrooms - Canned
11614.01	Mushrooms - Fresh
11615	Mustard
11620	Olives
11621.01	Onions - Green
11621.02	Onions - Red
11621.03	Onions - Yellow or White
11630	Parfait
11631.01	Pepper - Black
11631.02	Pepper - Red
11632	Pepperoni
11633	Pickles
11634	Pineapple
11635	Potato Chips
11636	Potato Salad
11640	Radishes
11641	Relish - Sweet
11642	Refried Beans
11643	Red Wine Vinegar
11650	Salami
11651	Salt
11652.01	Sauce, Barbeque
11652.02	Sauce, Horseradish
11652.03	Sauce, Pizza
11653	Sausage
11655	Spice Blend
11656	Spinach, Leaf
11657	Sweetner
11658	Sunflower Seeds
11660.01	Tea - Hot
11660.02	Tea - Iced
11661.01	Tomatoes - Fresh
11661.02	Tomato Paste
11661.03	Tomatoes - Cherry
11662.01	Topping - Butterscotch

Number	Procedure Name
11662.02	Topping - Fudge
11662.03	Topping - Strawberry
11663	Turkey
11664	Tortilla Chips
11665	Taco Flavored Dorritos or Chips
11666	Three Bean Salad
11670	Vegetable Oil
11680.01	Wine - Red
11680.02	Wine - White
11900	Aluminum Foil
11910.01	Carry Out Box 14½"
11910.03	Carry Out Box 10½"
11910.04	Carry Out Styrofoam "To Go Box"
11911.01	Cup, Cold 12 oz.
11911.02	Cup, Cold 16 oz.
11911.03	Cup, Hot 8 oz.
11930	Glass - Beer
11940.01	Plate - Pizza
11940.02	Plate - Salad
11940.03	Platter
11945	Sandwich Picks
11950.01	Beer - Dark
11950.02	Beer - Low Calorie
11950.03	Beer - Regular
11960	Cocont Oil Bar
11970	Flavocal
11980	Popcorn
11985	Birthday Candles

FOOD, BEVERAGE AND PAPER SPECIFICATIONS

ShowBiz Pizza Place Management shall serve all approved products and only approved items as required in accordance with the Specifications Section. Adherence to food specifications and recipes is essential to protect the ShowBiz Pizza Place, Inc. marks and goodwill. This is to ensure a system wide quality.

The Specifications Section provides minimum requirements for all food, beverage and paper products to be used by ShowBiz Pizza Place restaurants. Included are sources and/or brands for the products. Other sources and/or brands that meet or exceed the specifications may be approved by ShowBiz Pizza Place, Inc.

It is recommended that a local distributor be contacted for supplies. The distributor must obtain a release from ShowBiz Pizza Place, Inc. for proprietary and trade secret items. The Director of Food Standards and Controls for ShowBiz Pizza Place, Inc. must approve all distributors. Contact:

Director of Food Standards & Controls
ShowBiz Pizza Place, Inc.
4441 West Airport Freeway
Irving, TX 75062

CONFIDENTIAL

SHOWBIZ PIZZA PLACE

OPERATIONS MANUAL

Procedure # 11500
Title: Specifications
Almonds
Section: Specifications
Effective Date: 4-30-82

INGREDIENT: Almonds

USAGE: Aloha Pizza

DESCRIPTION:

TYPE	Blanched
STYLE	Sliced
GRADE	U.S. #1
PACK	1-3 Lb. Cans
BRAND	Local Purveyor

CHARACTERISTICS: Light tan or beige color, moderately crisp texture, green nut-like flavor.

DEFECTS: Soggy, musty odor, moldy, excess shell fragments.

SHELF LIFE: Twelve (12) months in unopened can; ten (10) days in opened can when refrigerated.

HANDLING: Store in cool dry place. Purchase smallest container sizes available due to low usage.

CONFIDENTIAL

SHOWBIZ PIZZA PLACE

OPERATIONS MANUAL

Procedure # 11501
Title: Alfalfa Sprouts Fresh
Section: Specifications
Effective Date: 3-16-84

INGREDIENT: Fresh Alfalfa Sprouts

USAGE: Salad Bar

DESCRIPTION:

TYPE	Fresh
STYLE	N/A
GRADE	A
PACK	12/4 oz. Plastic container or bag
BRAND	Any local produce purveyor

CHARACTERISTICS: Green in color

DEFECTS: Rotting at base

SHELF LIFE: 2 weeks under refrigeration

HANDLING: Store in refrigerator

CONFIDENTIAL

INGREDIENT: Au Jus

USAGE: Roast Beef Sandwich

DESCRIPTION:

TYPE	Beef Stock seasoned for Au Jus
STYLE	Liquid
GRADE	N/A
PACK	12 - #5 cans
BRAND	Corporate locations: NA Franchised locations: Le Gout #80963 or equivalent

CHARACTERISTICS: Should have very salty beef flavor. Full strength with dark brown color.

DEFECTS: Rancid flavor, bulging or leaking cans.

SHELF LIFE: 1 year

HANDLING: Store in cool dry place. Refrigerate after opening.

SHOWBIZ PIZZA PLACE

OPERATIONS MANUAL

Procedure # 11510
Title: Specifications
Bacon Bits
Section: Specifications
Effective Date: 5-13-85

INGREDIENT: Bacon Bits

USAGE: Salad Bar

DESCRIPTION:

TYPE	Natural, All Meat, Prefried, Real
STYLE	Crumbles or Bits
GRADE	U.S.D.A.
PACK	2 - 10 lb boxes/case
BRAND	Corporate locations: Wilson Franchise locations: Wilson, Oscar Mayer, Hormel or equivalent

CHARACTERISTICS: Product should be dry, free flowing, with distinct fried, crisp bacon flavor.

DEFECTS: Stale, rancid, oily, lumpy or caked.

SHELF LIFE: Six (6) months in unopened can; one (1) week after container is opened.

HANDLING: Product should be stored in cool dry place. After opening, the product should be stored at room temperature. Rotate stock frequently. Product which is refrigerated will become soft and soggy and lose its crispness.

Note: Some local health departments may require refrigeration. Follow local dictates where necessary. Refer to Salad Bar Layout for alternate position.

SHOWBIZ PIZZA PLACE

OPERATIONS MANUAL

Procedure # 11511
Title: Specifications
Bean Sprouts
Section: Specifications
Effective Date: 4-30-82

INGREDIENT: Bean Sprouts

USAGE: Salad Bar

DESCRIPTION:

TYPE	Canned
STYLE	Water Pack
GRADE	N/A
PACK	6 #10 Cans/Case
BRAND	Any local produce purveyor or approved distributor's house label.

CHARACTERISTICS: Sprouts should be firm and crisp. There should be a distinct bean flavor. Color should be white.

DEFECTS: Wilted or soft and mushy in texture. Sour taste, excessive amounts of seeds and pulp.

SHELF LIFE: Six months stored in unopened can in cool place. Three days after can is opened and stored under refrigeration.

HANDLING: Canned sprouts are to be drained and refrigerated after opening.

CONFIDENTIAL

INGREDIENT: Roast Beef

USAGE: Sandwiches

DESCRIPTION:

TYPE	Eye of Round
STYLE	Precooked, (Medium Rare to Rare) Dry Pack
GRADE	U.S.D.A. Choice, IMPS No. 171C
PACK	Cryovac, 5-7 lbs. each
BRAND	Corporate locations: N/A Franchise locations: Zartic, Choice, Rare, #C54812 MBP-XL, "Delite", Medium Rare, #S26940M R. Wilke Meats, "Gourmet Menu", Eye of Round Rare Wilson Dubuque Iowa or Equivalent

CHARACTERISTICS: Should have most of the fat removed. Roast will be 15-18" long and about 4" in diameter. Grain will run lengthwise only. The medium-rare to rare roast should be pink to red in color. The outside should be dark brown to black and seasoned. The flesh should be marbled with fat evenly throughout.

DEFECTS: Rancid or spoiled flavor or odor. Overcooked and greyish in color. Broken or ruptured package. More than ¼" fat cap.

SHELF LIFE: Six (6) months frozen; ten (10) days thawed and stored under 40° F.

HANDLING: Store in freezer. Accept only product which is frozen unless it is to be used within ten (10) days. Frozen roasts are to be thawed in the refrigerator for 48 hours prior to using.

SHOWBIZ PIZZA PLACE

OPERATIONS MANUAL

Procedure # 11512.03
Title: Specifications
Beef Topping
Section: Specifications
Effective Date: 9-20-85

INGREDIENT: Precooked Beef Topping, Code 21000082

USAGE: Pizza Topping

DESCRIPTION:

TYPE Precooked, individually frozen

STYLE Chunky #1 Size

GRADE U.S.D.A

PACK 4-10lb. bags per carton

ANALYTICAL based on finished product

Chemical

Moisture	54 ± 3%
Fat	18 ± 3%
Protein	18 ± 2%
Salt	3.2 ± .3%

CONTENT BY VOLUME:

Beef	79.42
Water	7.45
T.V.P.	6.29
Salt, Onion, HVP Spice, Flavoring	6.84

Microbiological properties:

Total Plate Count - 30,000 / gm.
Coliform - 10 / gm. Max.
Yeast and Mold - 50 / gm.
E. Coli - Negative
Staphylococcus (C.P.) - 50 / gm.
Clostridium Perfringens - 10 / gm.

INGREDIENT: Sliced Beets

USAGE: Salad Bar

DESCRIPTION:

TYPE	Sliced or serated, pickled
STYLE	Sliced Medium
GRADE	U.S. #1 or Grade A
PACK	6 #10 Cans/Case (6 Lbs., 9 oz. per can net)
BRAND	Any approved Distributor's House Label

CHARACTERISTICS: Slices should be uniform, not more than 5/16" thick or 3½" in diameter. Uniform color with typical beet flavor.

DEFECTS: Irregular slices in thickness and diameter, excess ends and pieces not round. Bulged or severely dented cans.

SHELF LIFE: One (1) year in unopened can, five (5) days in opened and refrigerated container.

HANDLING: Opened product must be kept covered in the refrigerator. This can be placed in either the manufacturer's containers or plastic inserts depending on the local health department standards. Store in natural juices.

CONFIDENTIAL

SHOWBIZ PIZZA PLACE

OPERATIONS MANUAL

Procedure # 11514
Title: Specifications
Bread Sticks
Section: Specifications
Effective Date: 4-30-82

INGREDIENT: Breadsticks (Assorted)

USAGE: Salad Bar

DESCRIPTION:

TYPE	Toasted
STYLE	Assorted
GRADE	N/A
PACK	1000 Twin Stick Packs
BRAND	Nabisco, Keebler, Sunshine, or equivalent

CHARACTERISTICS: Should be crisp, but tender and approximately 3½" in length with two per package, unbroken.

DEFECTS: Torn packages, broken sticks, stale flavor.

SHELF LIFE: Three (3) months stored in cool dry place.

HANDLING: Product is to be stored in cool dry area. Open containers must not be refrigerated or they will become soggy.

CONFIDENTIAL

INGREDIENT: Broccoli

USAGE: Salad Bar

DESCRIPTION:

TYPE	Fresh
STYLE	N/A
GRADE	Grade A
PACK	Individual or by the Lb.
BRAND	Any Local Produce Purveyor

CHARACTERISTICS: Should have even dark tops with lighter green stalk. Spears should be 90% less than 2" in length. Buds should be firm and well developed.

DEFECTS: Uneven color from yellow to dark green. Tough, fibrous stems. Excess dirt, wilted and soft buds.

SHELF LIFE: Depending on condition when received, may range from 3 to 5 days.

HANDLING: Should be refrigerated immediately. Storage in a closed container is preferred.

CONFIDENTIAL

SHOWBIZ PIZZA PLACE

OPERATIONS MANUAL

Procedure # 11516.01
Title: Specifications
Bun-Hot Dog
Section: Specifications
Effective Date: 4-30-82

INGREDIENT: Bun

USAGE: Hot Dog

DESCRIPTION:

TYPE	Plain, White, 1½ to 2 oz.
STYLE	Sliced, 6"
GRADE	Enriched
PACK	8 or 12 Per Pack
BRAND	Any local bakery

CHARACTERISTICS: Should be fresh and soft with golden brown crust, fully hinged.

DEFECTS: Open package, moldy, musty odor, broken pieces.

SHELF LIFE: Four days. Supplier should rotate twice per week.

HANDLING: Product is to be stored in cool, dry place. Rotate stock each time it is received. Refuse product which is crushed or has broken packages. Store one layer deep.

CONFIDENTIAL

SHOWBIZ PIZZA PLACE

OPERATIONS MANUAL

Procedure # 11516.02
Title: Specifications
French Roll
Section: Specifications
Effective Date: 4-30-82

INGREDIENT: French Roll

USAGE: Sandwich

DESCRIPTION:

TYPE	French Roll with Sesame Seeds (Split Top)
STYLE	Hero, Sub or Hoagie, Cut
GRADE	N/A
PACK	6 or 12 per Pack or Pillow Pack.
BRAND	IIT Continental Manor Rainbo American Bakeries Any local bakery able to supply according to this specification

CHARACTERISTICS: Product should be approximately 6"-6½" in length, 2½"-3" wide, and 1-3/4"-2" high. The crust should be soft and golden brown in color. The inside should be bright white with large to small cells or crumbly texture.

DEFECTS: Mold, stale or dried out. Broken or crushed rolls. Packages which are torn or open.

SHELF LIFE: Four days.

HANDLING: Product is to be stored in cool, dry place. Rotate stock each time it is received. Refuse product which is crushed or has broken packages. Store one layer deep.

CONFIDENTIAL

SHOWBIZ PIZZA PLACE

OPERATIONS MANUAL

Procedure # 11516.03
Title: Specifications
Hamburger Bun
Section: Specifications
Effective Date: 6-18-85

INGREDIENT: Hamburger Bun

USAGE: Hamburger

DESCRIPTION:

TYPE	Hamburger bun
STYLE	3-1/2 - 3-3/4" diameter, sliced, enriched
GRADE	N/A
PACK	8 per package or Pillow Pack.
BRAND	Local Bakeries.

CHARACTERISTICS: Baked, white, hamburger style bun. Should be split approximately through the middle.

DEFECTS: Moldy, stale odor or dry to the touch. Uneven slicing between top and bottom. Expired date or broken packages.

SHELF LIFE: Four (4) days at room temperature.

HANDLING: Product is to be stored in cool, dry place. Rotate stock each time it is received. Refuse product which is crushed or has broken packages. Store one layer deep.

SHOWBIZ PIZZA PLACE

OPERATIONS MANUAL

Procedure # 11521.01
Title: Specifications
Chocolate Cake
Section: Specifications
Effective Date: 5-13-85

INGREDIENT: Birthday Cake

USAGE: Birthday Parties

DESCRIPTION:

TYPE	Chocolate Cake with Butter Cream Icing
STYLE	3 Layers, 8" Diameter
GRADE	N/A
PACK	6 Cakes/Case
BRAND	Corporate locations: Sara Lee, Code #8531, or Awrey Franchise locations: Sara Lee, Awrey, or equivalent

CHARACTERISTICS: Three layers frosted with whipped butter cream icing and multicolor "sprinkles" on top.

DEFECTS: Icing has been crushed, smeared or is absent

SHELF LIFE: Six (6) months stored in freezer. One (1) day thawed.

HANDLING: As soon as the product is received, it must be placed in the freezer. Do not accept product which is thawed. Rotate stock frequently. DO NOT remove from freezer more than 24 hours prior to serving.

SHOWBIZ PIZZA PLACE

OPERATIONS MANUAL

Procedure # 11521.02
Title: Specifications
Cake - Walnut
Section: Specifications
Effective Date: 4-30-82

INGREDIENT: Birthday Cake

USAGE: Birthday Parties

DESCRIPTION:

TYPE	Walnut
STYLE	3 Layers, 8" Diameter
GRADE	N/A
PACK	6 Cakes/Case
BRAND	Sara Lee, Code # 8518.

CHARACTERISTICS: Three layers frosted with whipped cream icing and sprinkled with chopped walnuts.

DEFECTS: Icing has been crushed, smeared or is absent. Absence of walnuts.

SHELF LIFE: Six (6) months stored in freezer. One (1) day thawed.

HANDLING: As soon as the product is received, it must be placed in the freezer. Do not accept product which is thawed. Rotate stock frequently. DO NOT remove from freezer more than 24 hours prior to serving.

CONFIDENTIAL

SHOWBIZ PIZZA PLACE

OPERATIONS MANUAL

Procedure # 11523
Title: Specifications
Carrots
Section: Specifications
Effective Date: 4-30-82

INGREDIENT: Carrots

USAGE: Salad Bar

DESCRIPTION:

TYPE	Fresh
STYLE	Sticks or Whole
GRADE	Grade A, U.S. Fancy "Standard Sizing"
PACK	1 Lb. Cello or bulk pack
BRAND	Any approved local purveyor

CHARACTERISTICS: Carrots should be uniform in size, from 1/2" to 3/4" in diameter at the base and 2" to 2 1/4" at the shoulder with 6" to 7" length. Should be bright, reddish orange color, firm with smooth skin.

DEFECTS: Wilted, split skin, irregularly shaped, moldy tops, freezer burned, excessively dirty.

SHELF LIFE: Seven (7) days under refrigeration.

HANDLING: Carrots must be refrigerated at all times. Wash and rinse upon receipt and check for quality. See Salad Bar Job Aid for preparation. Carrots can be stored in ice water under refrigeration to regain crispness.

CONFIDENTIAL

SHOWBIZ PIZZA PLACE

OPERATIONS MANUAL

Procedure # 11524
Title: Specifications
Catsup
Section: Specifications
Effective Date: 5-13-85

INGREDIENT: Catsup

USAGE: Condiment Bar

DESCRIPTION:

TYPE	Canned or Individual Serving Packets
STYLE	N/A
GRADE	U.S. Fancy
PACK	6 #10 Cans (7 Lbs. 2 oz.); 200 count packets
BRAND	Hunt Wesson, H. J. Heinz, House Brands

CHARACTERISTICS: Should be bright, deep red, smooth in texture with no separation. Bulk should be pourable from bottle. Rich tomato and light vinegar flavor.

DEFECTS: Separation of liquid, dark reddish brown color, dented or bulged cans. Damage to individual packets.

SHELF LIFE: One (1) year in cool dry place.

HANDLING: Store in cool dry place. Bulk may be stored in covered plastic inserts or the manufacturer's container as per local health codes, rotate stock regularly.

INGREDIENT: Cauliflower

USAGE: Salad Bar

DESCRIPTION:

TYPE	Fresh
STYLE	N/A
GRADE	Grade A
PACK	Individually or by the Lb.
BRAND	Any Local Produce Purveyor

CHARACTERISTICS: Color should be white to light cream. Stalks may be a light green to white color. Leaves should be greenish yellow to green. Buds should be firm and crisp.

DEFECTS: Yellowing tops, soft or fragmented buds, excess dirt or insect infestation, moldy or mildew.

SHELF LIFE: Three (3) to five (5) days, depending on condition of product when received.

HANDLING: Should be refrigerated immediately. Storage in a closed container is preferred.

CONFIDENTIAL

INGREDIENT: Celery

USAGE: Salad Bar

DESCRIPTION:

TYPE	Fresh
STYLE	Sticks
GRADE	U.S. Fancy #1
PACK	Whole stalks or cut/sliced sticks
BRAND	Any local produce purveyor

CHARACTERISTICS: Product should be firm and crisp, with bright yellow-green leaves. Sticks should be light green with minimum of stringy fiber, black heart, brown stem or soft root.

DEFECTS: Soft wilted stalks with decaying leaves. Pithy wood, stringy and bruised or blemished. Any rotting, mold or mildew.

SHELF LIFE: If received in excellent condition, five (5) days under refrigerator for whole stalks; for cut sticks, three days.

HANDLING: Celery stalks received in crates or cases should be sorted. Use minimum standard product first. Refrigerate at all times. Do not prepare any more than needed each day. Cut sticks must be refrigerated as soon as they are received. Keep bags closed at all times. Wilted product should be stored in ice water in the walk-in to regain crispness. See Salad Bar Job Aid for preparation.

CONFIDENTIAL

SHOWBIZ PIZZA PLACE

OPERATIONS MANUAL

Procedure # 11527.01
Title: Specifications
Cheese-American
Section: Specifications
Effective Date: 4-30-82

INGREDIENT: Cheese - American

USAGE: Sandwiches

DESCRIPTION:

TYPE	American, Processed
STYLE	Sliced (32 slices/lb.)
GRADE	U.S.D.A.
PACK	3-5 Lb. Bulk
BRAND	Kraft, Borden, Mid-America or Equivalent

CHARACTERISTICS: Product should be yellow in color with mild cheese flavor. Slices should be 3" x 3". Should possess good melting quality.

DEFECTS: Moldy or dry white powdery surface, broken or crumbled pieces.

SHELF LIFE: Refer to expiration date.

HANDLING: Store under refrigeration at all times. Keep covered tightly to prevent drying out or mold contamination.

CONFIDENTIAL

SHOWBIZ PIZZA PLACE

OPERATIONS MANUAL

Procedure # 11527.02
Title: Specifications
Cheese Blend 80-10-10
Section: Specifications
Effective Date: 1-13-86

INGREDIENT: Pizza Cheese Blend

USAGE: Pizza Topping

NOTE: Franchised locations have the choice of using this Cheese Blend or the 5 Cheese Blend used by company operated locations, see Specification #11527.10. CEC franchisees also see #11527.13.

DESCRIPTION:

TYPE	Mozzarella:	Low moisture, part skim (80%)
	Cheddar:	Mild, 3 months or less (10%)
	Provolone:	Smoked, 3 months or less (10%)
GRADE	U.S.D.A., Grade A	
PACK	25 Lb. poly-lined nitrogen gas flushed, 150 - 200 lbs./carton (corrugated)	
BRAND	Corporate locations: Mid American Farms, P.O. Box 1593, Springfield, Missouri 65805 or equivalent Code # 760 Franchise locations: Mid America or equivalent.	

CHARACTERISTICS: Product will be received frozen, diced, (not shredded) 1/8" cube cut and thoroughly blended. Product should be relatively free flowing when thawed.

DEFECTS: Evidence of mold, dirt, or any other foreign matter, lumpy wet product which cannot be easily broken up by hand, rancid or sour acid odor or flavor, excessively large pieces of cheese. When melted has a clear glassy appearance and is excessively runny.

SHELF LIFE: One (1) week thawed under refrigeration and covered to prevent drying and exposure to air-borne mold spores. Forty-five (45) days when kept in the freezer tightly covered to prevent drying. Refer to Manufacturers code date.

HANDLING: Product will be received frozen. When using on a regular basis, product must be removed from the freezer and placed in the refrigerator to thaw. This will take 48 hours. After the cheese is thawed, remove from the carton and pour into full size, deep make-up station inserts. Cover, date and return to refrigerator until ready for use.

SHOWBIZ PIZZA PLACE

OPERATIONS MANUAL

Procedure # 11527.03
Title: Specifications
Cheese-Cheddar
Section: Specifications
Effective Date: 1-13-86

INGREDIENT: Cheddar Cheese

USAGE: Pizza Topping

DESCRIPTION:

TYPE	Mild, aged 3 months or less	
STYLE	Diced 1/8" cube	
GRADE	U.S.D.A. Grade A	
ANALYTICAL	Moisture:	39% maximum
	Fat:	50% minimum
	pH:	5.4 maximum
	salt:	1.5 ± 0.5
	Staph:	1,000 maximum/gram
	Salmonella:	Neg.
	E. coli:	3.0 maximum/gram
SOURCE	Mid America Farms, P.O. Box 1593, Springfield, Missouri 65805, or equivalent Code # 500	

CHARACTERISTICS: Should be firm, smooth, fairly uniform, with even yellow-orange color. Should have mildly pungent odor with slightly aged flavor. Melt characteristics should be even with minimum of oil separation.

DEFECTS: Appearance of dirt, mold, non-uniform melting characteristics, soft, wet or sticky characteristics.

SHELF LIFE: This product is used in compounding the 80-10-10 Cheese Blend, Spec # 11527.02, and the 5 Cheese Blend, Spec # 11527.10. It will have the same shelf life characteristics. Please refer to those specs.

SHOWBIZ PIZZA PLACE

OPERATIONS MANUAL

Procedure # 11527.04
Title: Specifications
Cheese-Cottage
Section: Specifications
Effective Date: 4-30-82

INGREDIENT: Cottage Cheese

USAGE: Salad Bar

DESCRIPTION:

TYPE	Small Curd
STYLE	Creamed
GRADE	U.S.D.A. Grade A
PACK	Tub, 2-5 lb.
BRAND	Any local dairy

CHARACTERISTICS: Should be bright white in color, with small even curd.

DEFECTS: Separation of liquid to the top, yellowish color, mold, souror spoiled milk flavor.

SHELF LIFE: Guideline is the expiration date established by the manufacturer.

HANDLING: Keep refrigerated at all times, 40° F. or less. Rotate inventory weekly.

CONFIDENTIAL

SHOWBIZ PIZZA PLACE
OPERATIONS MANUAL

Procedure # 11527.05
Title: Specifications
Mozzarella, Part Skim
Section: Specifications
Effective Date: 1-13-86

INGREDIENT: Mozzarella, Low Moisture, Part Skim

USAGE: Pizza Topping

DESCRIPTION:

TYPE	Low moisture, part skim	
STYLE	Diced 1/8" cube	
GRADE	U.S.D.A. Grade A	
ANALYTICAL	Moisture:	45 - 52%
	Fat:	30 - 45%
	pH:	5.1 - 5.4
	Salt	1.0 -1.7
	Coliform:	50 maximum
	Staph:	Neg.
	Salmonella:	Neg.
	E coli.:	Less than .3
	Yeast and Mold	50 maximum/gram
SOURCE	Mid America Farms, P.O. Box 1593 Springfield, Missouri 65805 or equivalent Code #521	

CHARACTERISTICS: Should be smooth, creamy white, with mild, nutty, salty flavor and mild, cheesy odor. Close knit, firm, compact, rindless. Should be soft textured and have total melt down on baking.

DEFECTS: Wet, sticky, soft, lumpy, mold or dirt present, rancid or sour acrid flavor. When melted, has a clear glassy appearance and is excessively runny.

SHELF LIFE: This product is used in compounding the 80-10-10 Cheese Blend, Spec # 11527.02, and the 5 Cheese Blend, Spec # 11527.10. It will have the same shelf life characteristics. Please refer to those specs.

SHOWBIZ PIZZA PLACE

OPERATIONS MANUAL

Procedure # 11527.07
Title: Specifications
Cheese-Provolone
Section: Specifications
Effective Date: 1-13-86

INGREDIENT: Provolone

USAGE: Pizza Topping

DESCRIPTION:

TYPE	Natural, semi-soft, ripened	
STYLE	Diced 1/8" cube	
GRADE	U.S.D.A. Grade A	
ANALYTICAL	Moisture:	45% maximum
	Fat:	45% minimum
	Age:	60 day minimum
	Staph:	Neg.
	Salmonella:	Neg.
	E. coli:	3.0 maximum
SOURCE	Mid America Farms, P.O. Box 1593, Springfield, Missouri 65805 or equivalent Code #582	

CHARACTERISTICS: Creamy white, pungent, slightly smokey odor; creamy, smooth, semi-soft texture, soft but not wet.

DEFECTS: Evidence of mold or dirt, excessively wet or lumpy, objectionable rancid or acid flavor.

SHELF LIFE: This product is used in compounding the 80-10-10 Cheese Blend, Spec # 11527.02, and the 5 Cheese Blend, Spec # 11527.10. It will have the same shelf life characteristics. Please refer to those specs.

INGREDIENT: Cheese, Swiss

USAGE: Sandwiches

DESCRIPTION:

TYPE	Swiss, Processed
STYLE	Sliced (32 slices/lb.)
GRADE	U.S.D.A.
PACK	3-5 Lb. Bulk
BRAND	Any local Good Quality

CHARACTERISTICS: Product should be creamy white with typical creamy Swiss cheese flavor. Should have good melting properties. Slices should be approximately 3" x 3".

DEFECTS: Moldy or excessively dry and crumbly. Broken pieces.

SHELF LIFE: Refer to expiration date.

HANDLING: Store under refrigeration and keep tightly wrapped to prevent drying out or mold contamination.

CONFIDENTIAL

INGREDIENT: Cheddar Cheese Sauce

USAGE: Nacho Platter

DESCRIPTION:

TYPE	Canned
STYLE	Sharp Cheddar Cheese Sauce
PACK	6 #10 cans
BRAND	Corporate locations: Land-O-Lakes Franchise locations: Land-O-Lakes or equivalent

CHARACTERISTICS: Thick and creamy.

DEFECTS: Dented or leaking cans. Rancid or sour smell.

SHELF LIFE: 1 year in cool dry place. 5 days refrigerated in air tight container.

HANDLING: Product is to be kept in cool dry place. After opening keep product hot and well covered or refrigerate in air tight container.

SHOWBIZ PIZZA PLACE

OPERATIONS MANUAL

P-ocedure # 11527.10
Title: Specifications
5 Cheese Blend
Section: Specifications
Effective Date: 1-13-86

INGREDIENT: 5 Cheese Blend

USAGE: Pizza Topping

NOTE: Franchised locations have the choice of using this Cheese Blend or the 80-10-10 Cheese Blend referenced in Spec #11527.02. This Cheese Blend will be used in Company locations. CEC franchisees also see #11527.13

DESCRIPTION:

TYPE	Mozzarella:	Low moisture, part skim	48.0%
	Mozzarella:	Wholemilk	27.5%
	Provolone:		16.0%
	Cheddar:	Mild, 3 months or less	6.0%
	Parmesan:		2.5%

GRADE U.S.D.A., Grade A
PACK 1-25 Lb. nitrogen gas flushed bag per case
BRAND Corporate locations:
Mid American Farms, P.O. Box 1593,
Springfield, Missouri 65805 or equivalent
Code # 713
Franchise locations:
Mid America or equivalent.

CHARACTERISTICS: Product will be received frozen, diced, (not shredded) 1/8" cube cut and thoroughly blended. Product should be relatively free flowing when thawed.

DEFECTS: Evidence of mold, dirt, or any other foreign matter, lumpy wet product which cannot be easily broken up by hand, rancid or sour acid odor or flavor, excessively large pieces of cheese. When melted has a clear glassy appearance and is excessively runny.

SHELF LIFE: 14 days thawed under refrigeration and covered to prevent drying and exposure to air-borne mold spores. Six (6) months) when kept in the freezer tightly covered to prevent drying.

HANDLING: Product will be received frozen. When using on a regular basis, product must be removed from the freezer and placed in the refrigerator to thaw. This will take 48 hours. After the cheese is thawed, remove from the carton and pour into full size, deep make-up station inserts. Cover, date and return to refrigerator until ready for use.

INGREDIENT: Mozzarella, Wholemilk

USAGE: Pizza Topping

DESCRIPTION:

TYPE	Wholemilk	
STYLE	Diced 1/8" cube	
GRADE	U.S.D.A. Grade A	
ANALYTICAL	Moisture:	45% - 48%
	Fat:	45% minimum
	pH:	5.2 - 5.4
	Salt	1.1 - 1.7
	Staph:	Negative
	Salmonella:	Neg.
	E. coli:	0.3 maximum
	Piece Size (Shred)	1/8" X 1/8" X 2-2½"
	Coliform:	50 maximum
	Yeast/Mold	50 maximum
SOURCE	Mid America Farms, P.O. Box 1593, Springfield, Missouri 65805 or equivalent Code # 523	

CHARACTERISTICS: Should be smooth, creamy white, with mild, nutty, salty flavor and mild, cheesy odor. Close knit, firm, compact, rindless. Should be soft textured and have total melt down on baking.

DEFECTS: Wet, sticky, soft, lumpy, mold or dirt present, rancid or sour acid flavor. When melted, has a clear glassy appearance and is excessively runny.

SHELF LIFE: This product is used in compounding the 80-10-10 Cheese Blend, Spec # 11527.02, and the 5 Cheese Blend, Spec # 11527.10. It will have the same shelf life characteristics. Please refer to those specs.

SHOWBIZ PIZZA PLACE

OPERATIONS MANUAL

Procedure # 11527.12
Title: Specifications
Cheese-Parmesan for Blend
Section: Specifications
Effective Date: 1-13-86

INGREDIENT: Parmesan

USAGE: Pizza Topping

DESCRIPTION:

TYPE	Natural, hard grating	
STYLE	NA	
GRADE	U.S.D.A. Grade A	
ANALYTICAL	Moisture:	34% maximum
	Fat:	38 -42%
	pH:	5.0 - 5.4
	Salt:	2.0 - 5.0
	Staph:	Negative
	Salmonella:	Negative
	E. coli:	Negative
SOURCE	Mid America Farms, P.O. Box 1593, Springfield, Missouri 65805 or equivalent Code # 773	

CHARACTERISTICS: Straw colored cheese with the flavor of typical Parmesan cheese. Very firm and slightly dry.

DEFECTS: Evidence of mold or dirt, excessively wet or lumpy, objectionable rancid or strong flavor.

SHELF LIFE: This product is used in compounding the 80-10-10 Cheese Blend, Spec # 11527.02, and the 5 Cheese Blend, Spec # 11527.10. It will have the same shelf life characteristics. Please refer to those specs.

SHOWBIZ PIZZA PLACE

OPERATIONS MANUAL

Procedure # 11527.13
Title: Specifications
CEC Cheese Blend
Section: Specifications
Effective Date: 1-13-86

INGREDIENT: CEC Cheese Blend

USAGE: Pizza Topping

In addition to specification numbers 11527.02 and 11527.10, Chuck E. Cheese franchised locations also have the choice of preparing their cheese blend in house.

FORMULAS

1. BASE CHEESE - 100% Part Skim Mozzarella Cheese (see specification #11527.05)

2. TOPPING CHEESE - 77% Part Skim Mozzarella Cheese (see specification #11527.05) = 1 - 23 lb. block

   23% Provolone (see specification #11527.07) = 1 - 7 lb block

PROCEDURES

1. BASE CHEESE

   a. Grate approximately 1/16" thick. Cheese that is grated too thin will clump together and will be difficult to portion and spread. Cheese that is grated too thick will look like noodles and will not melt properly while being cooked.

   b. After cheese is grated, place in covered pan, label, and place in the walk-in.

2. TOPPING CHEESE

   a. Grate each cheese approximately 1/16" thick. Cheese that is grated too thin will clump together and will be difficult to portion and spread. Cheese that is grated too thick will look like noodles and will not melt properly while being cooked.

   b. Toss cheese together to mix evenly.

   c. Place in covered pan, label, and place in the walk-in.

NOTE: the base and topping cheese look alike. Be sure to label each pan as to which cheese it is.

SHOWBIZ PIZZA PLACE

OPERATIONS MANUAL

Procedure # 11528
Title: Specifications
Chow Mein Noodles
Section: Specifications
Effective Date: 4-30-82

INGREDIENT: Chow Mein Noodles

USAGE: Salad Bar

DESCRIPTION:

TYPE	Canned
STYLE	N/A
GRADE	N/A
PACK	24 oz. Cans, 12/Case
BRAND	LaChoy, Chung King or equivalent

CHARACTERISTICS: Should be dry, crisp crunchy texture with fresh flavor.

DEFECTS: Ruptured or severely dented cans, stale or musty odor, rancid flavor, burned or irregular color.

SHELF LIFE: One year in cool, dry storage.

HANDLING: Store both opened and canned in a cool dry place. Not in the refrigerator.

CONFIDENTIAL

INGREDIENT: Coffee

USAGE: Beverage

DESCRIPTION:

TYPE	Ground
STYLE	N/A
GRADE	Hotel and Restaurant
PACK	2 to 2½ oz. Pouches
BRAND	Corporate locations: La Touraine, Farmer Brothers Franchise locations: La Touraine, Farmer Brothers or equivalent

CHARACTERISTICS: Typical dry grind coffee. Should be rich in aroma and flavor when freshly brewed.

DEFECTS: Bland, underweight pouches, lack of flavor and aroma.

SHELF LIFE: One (1) month.

HANDLING: Product is to be rotated weekly by DineMor Foods representative. Insist on regular rotation. See recipe book for brewing procedure.

Note: Pack size will be dictated by local preference.

INGREDIENT: Instant Coffee

USAGE: Beverage

DESCRIPTION:

TYPE	Instant
STYLE	Decaffeinated
GRADE	N/A
PACK	1 Cup Serving Size
BRAND	Corporate locations: La Touraine, Farmer Brothers Franchise locations: La Touraine, Farmer Brothers or equivalent

CHARACTERISTICS: Should have rich coffee aroma when brewed. Should be dark brown and free flowing.

DEFECTS: Product which is caked will not be dissolved readily. Return for credit.

SHELF LIFE: Three (3) months.

HANDLING: Store in cool dry place. Rotate stock regularly.

INGREDIENT: Coffee Creamer

USAGE: Beverage Station

DESCRIPTION:

TYPE	Nondairy Whitener
STYLE	Powder
GRADE	N/A
PACK	Individual Portion Packs
BRAND	Corporate locations: La Touraine, Farmer Brothers Franchise locations: La Touraine, Farmer Brothers or equivalent

CHARACTERISTICS: Product is packaged in individual serving pouches. Should be creamy yellow in color, free flowing and readily soluble in hot water. Reject product which is caked.

DEFECTS: Caked or not soluble in hot water.

SHELF LIFE: Six (6) months.

HANDLING: This product is handled by DineMor Foods. It must be stocked and rotated on a regular basis by the DineMor representative.

SHOWBIZ PIZZA PLACE

OPERATIONS MANUAL

Procedure # 11530
Title: Specifications
Corn
Section: Specifications
Effective Date: 4-30-82

INGREDIENT: Cut Corn

USAGE: Pizza Topping

DESCRIPTION:

TYPE	Cut Corn, Kernels, Frozen
STYLE	Sweet
GRADE	U.S. Fancy #1
PACK	Bulk, 2-3 lb. Bags
BRAND	Any

CHARACTERISTICS: Should be bright yellow, frozen, free flowing.

DEFECTS: Thawed, frozen lumps, discolored.

SHELF LIFE: Three months in the freezer; three days thawed.

HANDLING: Place in the freezer as soon as it is received. Refuse product which is thawed. Rotate stock in the freezer.

CONFIDENTIAL

SHOWBIZ PIZZA PLACE

OPERATIONS MANUAL

Procedure # 11531
Title: Specifications
Croutons
Section: Specifications
Effective Date: 4-30-82

INGREDIENT: Croutons

USAGE: Salad Bar

DESCRIPTION:

TYPE	½" Cubes
STYLE	Seasoned, Toasted
GRADE	N/A
PACK	10 lb. polybag in box.
BRAND	Brownberry, Keebler, Nabisco, or equivalent

CHARACTERISTICS: Should be dry, toasted with slight brownish color.

DEFECTS: Too many crumbs, moldy, damp, lack of spice or seasoning.

SHELF LIFE: One (1) month, stored in cool dry place.

HANDLING: Store in cool dry place. Do not refrigerate as they will become soggy.

CONFIDENTIAL

SHOWBIZ PIZZA PLACE

OPERATIONS MANUAL

Procedure # 11532
Title: Specifications
Cucumbers
Section: Specifications
Effective Date: 4-30-82

INGREDIENT: Cucumbers

USAGE: Salad Bar

DESCRIPTION:

TYPE	Fresh
STYLE	Sliced, 3/16" thick
GRADE	U.S. Fancy #1
PACK	Bulk, 10 lbs.
BRAND	Any Local Produce Purveyor

CHARACTERISTICS: Should be crisp, firm with dark green skin and white pulp. Slices should be even and uniform.

DEFECTS: Soft, wilted, excess liquid in bag, yellowing in color, pulpy, pithy or slimy to the touch.

SHELF LIFE: Seven days whole; two days sliced.

HANDLING: Keep under refrigeration at all times. Slices are to be kept covered and drained. Prepare only what will be used each day. See Salad Bar Job Aid for preparation.

CONFIDENTIAL

INGREDIENT: ShowBiz Pizza Place, Inc. Dough Mix

USAGE: Pizza Dough

DESCRIPTION:

	TYPE	Dry
	STYLE	N/A
	GRADE	N/A
	PACK	50 pounds, Multiwall Kraft Poly Laminated Bag
	BRAND	General Mills, Inc. Code #11-860 Customer Order Service 1-612-540-7356
ANALYTICAL:	Moisture:	10.50 ± .50%
	Salt:	1.00 ± .05
	Sugar	2.50 ± .12
	Soda	.90 ± .05
	Fat	1.375± .07

CHARACTERISTICS: This product is a secret dry blend of flour, shortening, yeast, salt, sugar and leavenings. This formula is considered privileged and confidential and is the sole property of ShowBiz Pizza Place, Inc.

DEFECTS: Lumpy caked, torn bags, will not rise when mixed with water.

SHELF LIFE: Three (3) months from date of manufacture. See production code.

HANDLING: Product should be stored in a cool dry place off of the floor surface. It should be checked frequently for insect infestation.

CONFIDENTIAL

INGREDIENT: Bleu Cheese Dressing

USAGE: Salad Bar

DESCRIPTION:

TYPE	Institutional Pack	
STYLE	Chunky, Product Code # 31	
GRADE	N/A	
PACK	6 Gallon Pur Pak Containers/Case	
BRAND	Corporate Locations:	Eastern Foods, Inc. ONLY P.O. Drawer L Atlanta, GA 30337
	Franchised Locations:	Eastern Foods or Equivalent

CHARACTERISTICS: Egg-shell white color. Extra thick blend of mayonnaise, real cream, buttermilk, eggs, herbs, spices, and large chunks of bleu cheese.

DEFECTS: Too thick, too thin, separation of any of the oils, yellowish in color, sour in taste, too acidic.

SHELF LIFE: 120 days from date stamped on container.

HANDLING: Product must be stored under refrigeration at all times. Product is "READY TO SERVE", no cutting or diluting is necessary.

SHOWBIZ PIZZA PLACE

OPERATIONS MANUAL

Procedure # 11541.02
Title: Specifications
Dressing - French
Section: Specifications
Effective Date: 12-20-85

INGREDIENT: French Dressing

USAGE: Salad Bar

DESCRIPTION:

TYPE	Institutional Pack	
STYLE	Naturally Fresh Honey French, Product Code #11 Catalina Style	
GRADE	N/A	
PACK	6 Gallon Plastic Containers/Case	
BRAND	Corporate Locations:	Eastern Foods, Inc. ONLY P.O. Drawer L Atlanta, GA 30337
	Franchised Locations:	Eastern Foods or Equivalent

CHARACTERISTICS: Rich, glistening red color. A Catalina style with honey, oil, lemon, juice, tomato paste, special herbs and spices.

DEFECTS: Too thick, too thin, separation of any of the oils.

SHELF LIFE: 120 days from date stamped on container.

HANDLING: Product must be stored under refrigeration at all times. Product is "READY TO SERVE", no cutting or diluting is necessary.

INGREDIENT: Italian Dressing

USAGE: Salad Bar

DESCRIPTION:

TYPE	Institutional Ready to Use	
STYLE	Creamy Italian, Product Code # 41	
GRADE	N/A	
PACK	6 Gallon Pur Pak Containers/Case	
BRAND	Corporate Locations:	Eastern Foods, Inc. ONLY P.O. Drawer L Atlanta, GA 30337
	Franchised Locations:	Eastern Foods or Equivalent

CHARACTERISTICS: A soft yellow hue. A creamy blend of whole eggs and mayonnaise, fine Italian herbs and spices with the distinct flavor of garlic and just the right amount of vinegar to bring out the best in any salad.

DEFECTS: Too thick, too thin, rancid oil.

SHELF LIFE: 120 days from date stamped on container.

HANDLING: Product must be stored under refrigeration at all times. Product is "READY TO SERVE", no cutting or diluting is necessary.

SHOWBIZ PIZZA PLACE
OPERATIONS MANUAL

Procedure # 11541.04
Title: Specifications
Dressing - Thousand Island
Section: Specifications
Effective Date: 12-20-85

INGREDIENT: 1000 Island Dressing

USAGE: Salad Bar

DESCRIPTION:

TYPE	Institutional Pack	
STYLE	Product Code #21	
GRADE	N/A	
PACK	6 Gallon Pur Pak Containers/Case	
BRAND	Corporate Locations:	Eastern Foods, Inc. ONLY P.O. Drawer L Atlanta, GA 30337
	Franchised Locations:	Eastern Foods or Equivalent

CHARACTERISTICS: Coral appearance. Crisp pieces of sweet dill relish and fresh chopped vegetables are combined with a delicious base of tomato paste, mayonnaise, and selected herbs and spices for rich tropical taste.

DEFECTS: Too thick, too thin, rancid oil, or separation of oil.

SHELF LIFE: 120 days from date stamped on container.

HANDLING: Product must be stored under refrigeration at all times. Product is "READY TO SERVE", no cutting or diluting is necessary.

INGREDIENT: Reduced Calorie Ranch Dressing

USAGE: Salad Bar

DESCRIPTION:

TYPE	Institutional Pack	
STYLE	Product Code #81	
GRADE	N/A	
PACK	6 Gallon Plastic Containers/Case	
BRAND	Corporate Locations:	Eastern Foods, Inc. ONLY P.O. Drawer L Atlanta, GA 30337
	Franchised Locations:	Eastern Foods or Equivalent

CHARACTERISTICS: Off-white in color. Perfect blend of buttermilk, diet mayonnaise, and spices with only 31 calories per serving.

DEFECTS: Too thick, too thin, rancid oil, or separation of oil.

SHELF LIFE: 120 days from date stamped on container.

HANDLING: Product must be stored under refrigeration at all times. Product is "READY TO SERVE", no cutting or diluting is necessary.

INGREDIENT: Italian Reduced Calorie

USAGE: Salad Bar

DESCRIPTION:

TYPE	Institutional Pack
STYLE	N/A
GRADE	N/A
PACK	4 - 1 gallon jars
BRAND	Corporate locations: Doxsee-Bennett Label Franchise locations: Doxsee-Bennett Label or equivalent

CHARACTERISTICS: Product should be non separating; slightly thickened.

DEFECTS:

SHELF LIFE: Six months unopened - one month opened under refrigeration.

HANDLING: After jars are opened, they must be refrigerated.

SHOWBIZ PIZZA PLACE

OPERATIONS MANUAL

Procedure # 11550
Title: Specifications
Egg - Diced
Section: Specifications
Effective Date: 4-30-82

INGREDIENT: Eggs (Diced)

USAGE: Salad Bar

DESCRIPTION:

TYPE	Diced, Cooked
STYLE	I.Q.F. (Individually Quick Frozen)
GRADE	U.S.D.A. Grade A
PACK	Half Gallon Carton
BRAND	Ralston Purina Gourm-egg, Sunnytime, Key, or equivalent

CHARACTERISTICS: Product should be diced evenly, bright yellow yolk, free flowing when poured from carton.

DEFECTS: Egg yolk which has been mashed or caked, uneven dice, frozen into one lump indicates freeze thaw cycle. Dark layer between yolk and white.

SHELF LIFE: Three (3) months frozen; three (3) days thawed under refrigeration.

HANDLING: Product must be stored frozen at all times. When ready for use, remove from freezer and place in refrigerator overnight. Product may be used frozen but must be allowed to thaw for 30 minutes in insert before placing on salad bar.

CONFIDENTIAL

INGREDIENT: Flossugar

USAGE: Cotton Candy

DESCRIPTION:

TYPE	Granulated
STYLE	Pink, Silly Nilly Vanilla
GRADE	N/A
PACK	Waxed Carton 6 (3.5) lbs.
BRAND	Gold Medal Products Co., Cincinnati, Ohio

CHARACTERISTICS: Premixed, free flowing, ready to use.

DEFECTS: Caked or lumpy.

SHELF LIFE: Twelve (12) months stored in cool, dry place.

HANDLING: Upon receipt, place in dry, cool storage. Refuse any cartons which are broken or opened.

CONFIDENTIAL

SHOWBIZ PIZZA PLACE

OPERATIONS MANUAL

Procedure # 11561
Title: Specifications
Flour
Section: Specifications
Effective Date: 4-30-82

INGREDIENT: Flour, High Gluten

USAGE: Dough Production

DESCRIPTION:

TYPE	High Gluten, Hard Wheat
PACK	50 lb. bags
ANALYTICAL	Moisture: 10.0 ± .75% Protein: 12.0 ± .5% Ash: .46 ± .20%
BRAND	General Mills, Pillsbury, Peavey, International Milling, *Other

CHARACTERISTICS: High Protein, free flowing, high gluten flour which is white, hard wheat flour.

DEFECTS: Lumpy stale odor, contaminated with visual presence of foreign matter such as rodent hair, insect fragments, dirt, etc.

SHELF LIFE: Six (6) months stored in cool dry place.

HANDLING: Examine product when received for torn bags or signs or rodent or insect infestation. Refuse suspect samples. Rotate stock weekly.

*Any flour which meets the analytical and performance standards is acceptable.

CONFIDENTIAL

SHOWBIZ PIZZA PLACE

OPERATIONS MANUAL

Procedure # 11563
Title: Fudge Brownies

Section: Specifications
Effective Date: 8-24-84

INGREDIENT: Fudge Brownie

USAGE: Chocolate Fudge Brownie Ala Mode

DESCRIPTION:

TYPE	
STYLE	
GRADE	
PACK	8 - 8" X 12" trays
BRAND	Awrey Bakeries

CHARACTERISTICS: Chocolate brown in color with icing on top

DEFECTS: Moldy or broken-up in appearance

SHELF LIFE: Six (6) months frozen; twenty-one (21) days thawed under refrigeration; five (5) days covered at room temperature.

HANDLING: Thaw under refrigeration until ready to use

CONFIDENTIAL

INGREDIENT: Garbanzo Beans

USAGE: Salad Bar

DESCRIPTION:

TYPE	Canned, Cooked
STYLE	N/A
GRADE	Grade A
PACK	#10 Cans, Water Pack
BRAND	Any

CHARACTERISTICS: Should be uniform with light brown color and packed in relatively clear liquid. Tender, but firm in texture. Reasonably uniform in size.

DEFECTS: Loose skins, tough or sprouted beans, broken and/or random and varied sizes. Starchy or cloudy liquid.

SHELF LIFE: One (1) year unopened; 3 days opened, covered and refrigerated.

HANDLING: Rotate stock regularly. Opened cans must be transferred to food storage containers, covered and refrigerated. Store in natural juices. Drain before placing on salad bar.

INGREDIENT: Bell or Green Peppers

USAGE: Salad Bar/Pizza Topping

DESCRIPTION:

TYPE	Fresh
STYLE	Whole
GRADE	U.S. Fancy #1
PACK	Bulk or by the pound.
BRAND	Any Local Product Purveyor

CHARACTERISTICS: Should be bright green color, crisp, with good flavor and aroma.

DEFECTS: Soft, molded, mushy or discolored (bleached out). Excessive pulp or seeds present.

SHELF LIFE: Seven (7) days. They must be kept under refrigeration at all times.

HANDLING: Refrigerate immediately after receipt. Rotate stock regularly. Do not stack more than one layer. See Job Aid for preparation of green peppers for salad bar.

CONFIDENTIAL

SHOWBIZ PIZZA PLACE

OPERATIONS MANUAL

Procedure # 11580
Title: Specifications
Canadian Style Bacon
Section: Specifications
Effective Date: 10-28-85

INGREDIENT: Canadian Style Bacon

USAGE: Pizza - Sandwiches

DESCRIPTION:

TYPE	Smoked and cured whole pork loin muscle
STYLE	Stick - presliced 62-66 slices per pound 95% lean.
GRADE	USDA #1 Hogs
FAT COVER	1/8" maximum. Stick ends may have slightly more
DIAMETER	3"
CURE	Water, salt, sugar, corn syrup, sodium phosphates, flavoring, sodium nitrate
PACK	5 pound box
BRAND	Rose's Packing Company or equivalent

CHARACTERISTICS: Should have a typical sweet, ham flavor and odor. Should hold its shape after slicing. Should have smooth, even surfaces.

DEFECTS: Rancid, flavor or odor, slimy surface, discoloration, excess fat, gristle or connective tissue, ruptured package.

SHELF LIFE: Three (3) months frozen; ten (10) days thawed; three (3) days after package is opened and in use.

HANDLING: Keep frozen. Thaw in refrigerator for 48 hours. Accept only product which is frozen unless it is to be used within ten (10) days.

SHOWBIZ PIZZA PLACE

Procedure # 11581
Title: Specifications
Hot Dog
Section: Specifications
Effective Date: 9-10-84

OPERATIONS MANUAL

INGREDIENT: Hot Dog

USAGE: Torpedo Dogs

DESCRIPTION:

TYPE	All Beef Weiners (7" long; 6 to 1)
GRADE	U.S.D.A. Approved
PACK	10 lb Carton
BRAND	David Berg, or equivalent

CHARACTERISTICS: Should be firm, straight and slightly pink in color.

DEFECTS: Ruptured skin, white spots indicating freezer burn, sour or rancid flavor.

SHELF LIFE: Sixty (60) days frozen; three (3) days thawed.

HANDLING: Keep frozen while in storage. Remove from freezer and place in make station as needed day to day.

CONFIDENTIAL

SHOWBIZ PIZZA PLACE

OPERATIONS MANUAL

Procedure # 11582
Title: Hamburger Patty

Section: Specifications
Effective Date: 6-18-85

INGREDIENT: Hamburger Patty

USAGE: Hamburger

DESCRIPTION:

TYPE	80/20; 1.6 oz. frozen patty
STYLE	-
GRADE	N/A
PACK	20 lbs. per case
BRAND	Wisconsin Packing

CHARACTERISTICS: Individual quick frozen, red in color.

DEFECTS: Gray in color, thawed, broken patties.

SHELF LIFE: 3 months in freezer.

HANDLING: Keep frozen at all times. Cook from frozen state through pizza oven.

SHOWBIZ PIZZA PLACE

OPERATIONS MANUAL

Procedure # 11590.01
Title: Specifications
Cone(Ice Cream)
Section: Specifications
Effective Date: 4-30-82

INGREDIENT: Cone, Natural

USAGE: Ice Cream Cone

DESCRIPTION:

TYPE	Natural (No. 2 or capacity 2-2.5 oz. level to rim)
STYLE	Flat Bottom, Soft Serve Cone
GRADE	N/A
PACK	Minimum Available
BRAND	Local Dairy Supplier or Master Distributor

CHARACTERISTICS: Should be crisp, but tender, slightly sweet.

DEFECTS: Stale tasting, soft texture, broken or fragmented.

SHELF LIFE: Product should be stored in a cool dry place.

HANDLING: Reclose container after use. Order minimum quantities. Some local agencies require dispensers. These may be available thru dairy supplier, master distributor or local equipment house.

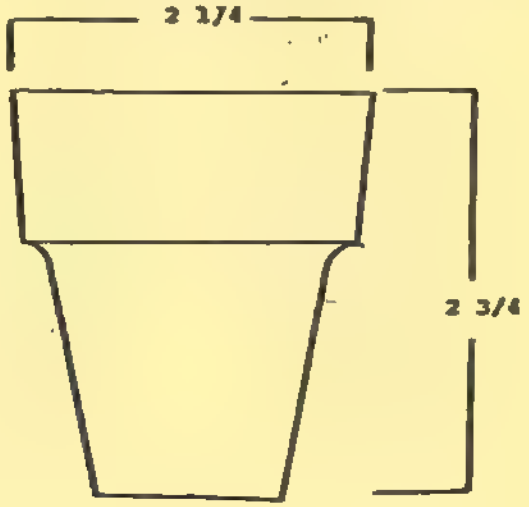

INGREDIENT: Ice Cream Mix

USAGE: Soft Serve Ice Cream

DESCRIPTION:

TYPE	Vanilla
STYLE	Soft Serve
GRADE	U.S.D.A.; 5% B.F. Minimum
PACK	½ or 1 Gallon Carton or Plastic Bottle
BRAND	Bordons, Beatrice, Carnation, Meadow Gold

CHARACTERISTICS: Thick, creamy, homogeneous, sweet, clear, vanilla aroma.

DEFECTS: Curdled, sour, heterogeneous, broken seal or container, discolored.

SHELF LIFE: Guideline Is the expiration date on carton.

HANDLING: Refrigerate as soon as it is received. Rotate stock.

CONFIDENTIAL

INGREDIENT: Jalapeno Peppers

USAGE: Salad Bar - Nacho Platter

DESCRIPTION:

TYPE	Canned
STYLE	Green, Sliced
GRADE	Grade A or U.S. #1
PACK	Canned 6 #10 Cans
BRAND	Any (Canned)

CHARACTERISTICS: Peppers will be dark green or in color. Should be firm and crisp in texture. Flavor should be hot to very hot pepper.

DEFECTS: Wilted or shriveled appearance. Blemishes in the skin surface. Crushed or leaking cans.

SHELF LIFE: 1 year in can, 3 days open.

HANDLING: Cans should be stored in cool dry place. Once open, store in air tight container. Rotate regularly. Care should be taken when handling. Avoid contact with eyes, ears, nose, lips and do not handle if employee has any cuts or abrasions.

CONFIDENTIAL

SHOWBIZ PIZZA PLACE

OPERATIONS MANUAL

Procedure # 11596
Title: Kale

Section: Specifications
Effective Date: 3-16-84

INGREDIENT: Kale

USAGE: Salad Bar (decoration only)

DESCRIPTION:

TYPE	Kale
STYLE	Crisp head
GRADE	A
PACK	24 heads per carton
BRAND	Any produce purveyor

CHARACTERISTICS: Firm with dark green leaves that are crisp.

DEFECTS: Excess dirt, insect infestation, soft or wilted, stack rot (slimy) or moldy.

SHELF LIFE: One week

HANDLING: Open each case upon receipt and examine contents. Refuse any product with above defects; refrigerate immediately.

CONFIDENTIAL

SHOWBIZ PIZZA PLACE

OPERATIONS MANUAL

Procedure # 11600
Title: Specifications
Iceberg Lettuce
Section: Specifications
Effective Date: 4-30-82

INGREDIENT: Iceberg (Crisp Head) Lettuce

USAGE: Sandwiches and Salads

DESCRIPTION:

TYPE	Fresh
STYLE	Iceberg-Crisp Head
GRADE	A
PACK	24 heads per carton
BRAND	Any local produce pruveyor

CHARACTERISTICS: Firm with medium dark green wrapper leaves. After removal of wrappers (normally 4-6 outer leaves), the lettuce should be light green. Leaves should be crisp to a pure white core.

DEFECTS: Excess dirt, insect infestation, soft or wilted, stack rot (slimy) or moldy.

SHELF LIFE: Should be ordered at least twice per week. Three (3) to five (5) days under normal refrigeration.

HANDLING: Open each case upon receipt and examine contents. Refuse any product with above defects. Refrigerate immediately.

CONFIDENTIAL

INGREDIENT: Liquid Margarine

USAGE: Sandwiches

DESCRIPTION:

TYPE	Liquid
STYLE	N/A
GRADE	N/A
PACK	1 Gallon Plastic Bottles
BRAND	Any

CHARACTERISTICS: Should be liquid at room temperature, with color and flavor similar to butter.

DEFECTS: Rancid flavor, separation of liquid, too thick to pour.

SHELF LIFE: Three months.

HANDLING: After opening, store in refrigerator.

CONFIDENTIAL

INGREDIENT: Milk

USAGE: Beverage Station

DESCRIPTION:

TYPE	Whole Homogenized
STYLE	Pasteurized
GRADE	A
PACK	½ Pint
BRAND	Any Local Dairy

CHARACTERISTICS: Creamy white, clean, sweet milk taste.

DEFECTS: Curdled, separated, sour tasting.

SHELF LIFE: Guideline is manufacturer's expiration date.

HANDLING: Keep under constant refrigeration, less than 40° F. Rotate stock.

CONFIDENTIAL

SHOWBIZ PIZZA PLACE

OPERATIONS MANUAL

Procedure # 11614
Title: Specifications
Mushrooms
Section: Specifications
Effective Date: 4-30-82

INGREDIENT: Mushrooms

USAGE: Pizza - Salad Bar

DESCRIPTION:

TYPE	Canned Domestic or Imported Straw Mushrooms
STYLE	Sliced Stems and Pieces
GRADE	U.S. Fancy #1, Grade A
PACK	6 #10 Cans/Case (68 oz. minimum drained wt.)
BRAND	Any Approved Distributor's House Label

CHARACTERISTICS: Mushrooms should be uniform slices of both stems and tops. Color should be between straw yellow and beige. Should all be tender but firm in texture.

DEFECTS: Irregular sizes, dark beige to black gills. Bulged cans or severely dented cans must not be used but returned for credit.

SHELF LIFE: One (1) year in unopened cans; three (3) days opened and refrigerated.

HANDLING: Store in cool dry place. Opened cans must be stored under refrigeration. Reclose all opened containers after use.

SHOWBIZ PIZZA PLACE

OPERATIONS MANUAL

Procedure # 11614.01
Title: Mushrooms Fresh

Section: Specifications
Effective Date: 3-16-84

INGREDIENT: Fresh Mushrooms

USAGE: Salad Bar

DESCRIPTION:

TYPE	Fresh
STYLE	N/A
GRADE	A
PACK	3# Basket/or 10# Box
BRAND	Any local produce purveyor

CHARACTERISTICS: White, or cream color; fresh in appearance

DEFECTS: If mushrooms caps are partially open, the gills (fluted formation between cap and stem) should be light in color. Brown or black gills indicate old age.

SHELF LIFE: 3 days MAXIMUM

HANDLING: Keep cold and humid and use as soon as possible. Just rinse and pat dry. DO NOT HOLD IN WATER. Avoid holding in plastic bags.

CONFIDENTIAL

SHOWBIZ PIZZA PLACE

OPERATIONS MANUAL

INGREDIENT: Mustard

USAGE: Condiment Bar

DESCRIPTION:

TYPE	Prepared, bulk or individual packets
STYLE	Salad Style, Tumeric Yellow
GRADE	N/A
PACK	(4) One Gallon (8 lbs.); 200 count packets
BRAND	French's, Kraft, House Brand

CHARACTERISTICS: Smooth, creamy texture, bright yellow color.

DEFECTS: Pale yellow color, separation of liquid.

SHELF LIFE: Six (6) months in cool dry place.

HANDLING: Store in cool dry place. Rotate stock regularly. Refrigerate opened containers.

INGREDIENT: Olives

USAGE: Pizza Toppings

DESCRIPTION:

TYPE	Canned
STYLE	Ripe, Pitted and Sliced
GRADE	U.S.D.A. Grade A or Fancy
PACK	6 #10 Cans/Case (55 oz. drained wt.)
BRAND	Any Approved Distributor's House Label

CHARACTERISTICS: Product should be uniform dark brown to black color, even slices with firm berry and distinctive nut flavor.

DEFECTS: Bulged or badly dented cans, smashed or finely diced or minced berry, pits exceeding 4 pieces per can unacceptable.

SHELF LIFE: Twelve (12) months unopened; three (3) days opened, covered and refrigerated.

HANDLING: After can is opened, store under refrigeration. Recover containers after opened.

CONFIDENTIAL

SHOWBIZ PIZZA PLACE

OPERATIONS MANUAL

Procedure # 11621.01
Title: Specifications
Onions - Green
Section: Specifications
Effective Date: 4-30-82

INGREDIENT: Green Onions

USAGE: Salad Bar

DESCRIPTION:

TYPE	Fresh
STYLE	Clipped
GRADE	U.S. #1
PACK	Bundles
BRAND	Any Local Produce Purveyor

CHARACTERISTICS: Tops should be dark green, even in color to the neck. Bottoms or bulbs should be white. Both tops and bulbs are to be firm and crisp. Bulb diameter should be 1/2" to 3/4".

DEFECTS: Wilted or discolored tops, sprouting, moldy or excessive dirt.

SHELF LIFE: Depending on condition when received, 3 to 5 days.

HANDLING: Refrigerate as soon as received. Sort through entire order for defective or substandard bunches. Store in closed container.

CONFIDENTIAL

SHOWBIZ PIZZA PLACE

OPERATIONS MANUAL

Procedure # 11621.02
Title: Specifications
Onions - Red
Section: Specifications
Effective Date: 4-30-82

INGREDIENT: Onions, Red

USAGE: Salad Bar

DESCRIPTION:

TYPE	Fresh
STYLE	Red, "Southport Glove"
GRADE	U.S. Fancy, Grade A, Medium
PACK	Each or by the Pound
BRAND	Any Local Produce Purveyor

CHARACTERISTICS: Firm, red with smooth even rings, mild onion flavor.

DEFECTS: Avoid onions with soft necks, thick pulpy centers, surface blemishes or fresh sprouts.

SHELF LIFE: Onions of standard acceptable quality will have several weeks storage under refrigeration. Buy on a weekly basis. Sliced onions will have two (2) days shelf life. Keep in closed container.

HANDLING: Whole onions can be stored in bulk in the walk-in. See Procedure #11032, page 18 for preparation of red onions for the salad bar.

CONFIDENTIAL

SHOWBIZ PIZZA PLACE

OPERATIONS MANUAL

Procedure # 11621.03
Title: Specifications
Onions - Yellow or White
Section: Specifications
Effective Date: 4-30-82

INGREDIENT: Onions, Yellow or White

USAGE: Pizza Topping

DESCRIPTION:

TYPE	Fresh yellow or white
STYLE	Whole
GRADE	U.S. Fancy #1
PACK	Bulk or by the pound.
BRAND	Any Local Produce Purveyor

CHARACTERISTICS: These onions should be crisp and white or yellow-white in color. Package should be free of dirt.

DEFECTS: Browning, excessively pulpy or soft.

SHELF LIFE: Seven (7) days under refrigeration.

HANDLING: Refrigerate immediately after receipt. Rotate stock regularly. See Procedure #11032, page 17 for preparation of onions for salad bar.

CONFIDENTIAL

Procedure # 11630
Title: Specifications
Parfait
Section: Specifications
Effective Date: 5-13-85

SHOWBIZ PIZZA PLACE

OPERATIONS MANUAL

INGREDIENT: Parfait

USAGE: Salad Bar

DESCRIPTION:

TYPE	Gelatin and Whipped Cream with Fruit Added
STYLE	Gelatin Base with Whipped Cream
PACK	7 Lb. Plastic Tubs or Trays
BRAND	Corporate locations: N/A Franchise locations: Orval Kent, Mrs. Giles, Alex, or equivalent

CHARACTERISTICS: Should be thick and firm with distinct pieces of either pineapple or strawberries. Should be sweet tasting.

DEFECTS: Weeping or break down of creamed filling. Sour tasting or rancid.

SHELF LIFE: Ninety (90) days in sealed container; seven (7) days after opened.

HANDLING: Refrigerate at all times. Rotate stock weekly. Reclose and refrigerate after seal is broken.

SHOWBIZ PIZZA PLACE

OPERATIONS MANUAL

Procedure # 11630
Title: Specifications
Parfait
Section: Specifications
Effective Date: 4-30-82

INGREDIENT: Parfait

USAGE: Salad Bar

DESCRIPTION:

TYPE	Gelatin and Whipped Cream with Fruit Added
STYLE	Gelatin Base with Whipped Cream
PACK	7 Lb. Plastic Tubs or Trays
BRAND	Orval Kent, Mrs. Giles, Alex, or equivalent

CHARACTERISTICS: Should be thick and firm with distinct pieces of either pineapple or strawberries. Should be sweet tasting.

DEFECTS: Weeping or break down of creamed filling. Sour tasting or rancid.

SHELF LIFE: Ninety (90) days in sealed container; seven (7) days after opened.

HANDLING: Refrigerate at all times. Rotate stock weekly. Reclose and refrigerate after seal is broken.

COMPANY CONFIDENTIAL

INGREDIENT: Black Pepper

USAGE: Table Shakers

DESCRIPTION:

TYPE	Medium-Coarse Ground
STYLE	Black
GRADE	N/A
PACK	5 Lb. Plastic Jars or Cans
BRAND	Any

CHARACTERISTICS: Should have typical pepper aroma and taste, free flowing and complete absence of stems and pieces.

DEFECTS: Bland flavor and aroma, contaminated with stems, leaves or other foreign matter.

SHELF LIFE: Six (6) months in tightly closed container.

HANDLING: Store in cool dry place. Reclose containers after each use. Wash hands after handling to avoid irritation of eyes and nose.

CONFIDENTIAL

INGREDIENT: Red Pepper

USAGE: Table Shakers

DESCRIPTION:

TYPE	Crushed Red
STYLE	N/A
GRADE	N/A
PACK	1-5 Lb. Jars or Cans
BRAND	Any

CHARACTERISTICS: Product should be free flowing mixture of flat red and brown berries. Should have a hot taste and chili powder aroma.

DEFECTS: Bland aroma, lack of flavor, contaminated with stems and pieces.

SHELF LIFE: Six (6) month in tightly closed container.

HANDLING: Product should be stored in cool dry place. Always reclose containers after use. Always wash hands well after handling. Will cause severe irritation of eyes, nose, lips if contact is made with hands.

CONFIDENTIAL

SHOWBIZ PIZZA PLACE

OPERATIONS MANUAL

Procedure # 11632
Title: Specifications
Pepperoni
Section: Specifications
Effective Date: 6-09-83

INGREDIENT: Pepperoni

USAGE: Pizza Topping

DESCRIPTION:

TYPE: Sliced Frozen

STYLE: 14-16 per oz., 1 3/4" ± 1/8" in diameter
Casing to be removed by manufacturer

GRADE: U.S.D.A. Approved

PACK: 25 Lbs. per case

ANALYTICAL: based on finished product

Chemical:

Fat	42 ± 2%
Moisture	29% Max.
Protein	20% ± 1%

Microbiological:

Total Plate Count - Less than 1,000
Coliform - Less than 1,000
Coaqulase Staph Positive - Less than 1,000
Salmonelia - Negative
Trichina - Negative

BRAND: Hormel, Swift, Swiss American Sausage (#906), Patrick Cudahy

CHARACTERISTICS: Slices must be uniform in thickness and diameter, heavy spice flavor, salty, with slight sweetness.

DEFECTS: Excessive fat which will detract from appearance of pizza, curling or cupping of slices is also undesirable. Moldy, rancid or spoiled.

CONFIDENTIAL

SHELF LIFE: Forty-five (45) days frozen; ten (10) days refrigerated.

HANDLING: Product must be kept in the freezer during normal storage. Place under refrigeration for 48 hours prior to use on make station. Rotate stock each week.

CONFIDENTIAL

SHOWBIZ PIZZA PLACE

OPERATIONS MANUAL

Procedure # 11633
Title: Specifications
Pickles
Section: Specifications
Effective Date: 4-30-82

INGREDIENT: Pickle Spears

USAGE: Sandwiches

DESCRIPTION:

TYPE	Pickled
STYLE	Spears, Kosher
GRADE	U.S. Fancy, Grade A
PACK	Bulk
BRAND	Any good quality, master distributor house label.

CHARACTERISTICS: Firm, crisp, even colored, light to dark green. Should have good dill-vinegar flavor.

DEFECTS: Limp, shriveled, large soft seeds or internal flesh, tough skin, yellow blemishes, grit or dirt.

SHELF LIFE: One (1) year closed in refrigerator; thirty (30) days opened in refrigerator.

HANDLING: Examine product for above characteristics. After opening, place in refrigerator.

CONFIDENTIAL

SHOWBIZ PIZZA PLACE

Procedure # 11633.01
Title: Specifications
Pickle Slices
Section: Specifications
Effective Date: 6-18-85

OPERATIONS MANUAL

INGREDIENT: Pickle Slices

USAGE: Hamburgers

DESCRIPTION:

TYPE	Sliced pickles
STYLE	Dill; straight or crinkle cut; slices approximately 1/16" - 1/8" thick.
GRADE	N/A
PACK	Bulk
BRAND	Heinz, or equivalent

CHARACTERISTICS: Crisp pickle slices, light to dark green color. Good dill-vinegar flavor. Even slices.

DEFECTS: Shriveled, tough skin, grit or dirt, "slimy", rancid flavor.

SHELF LIFE: One (1) year unopened; thirty (30) days opened in refrigerator.

HANDLING: Place day's need in small plastic insert in sandwich area. Keep all opened product under refrigeration.

SHOWBIZ PIZZA PLACE

OPERATIONS MANUAL

Procedure # 11634
Title: Specifications
Pineapple Tidbits
Section: Specifications
Effective Date: 4-30-82

INGREDIENT: Pineapple Tidbits

USAGE: Pizza Topping

DESCRIPTION:

TYPE	Canned in Light Syrup
STYLE	Tidbit or Small Chunk
GRADE	U.S. Fancy #1, Grade A
PACK	6 #10 Cans (3 lb., 8 oz. minimum drained wt.)
BRAND	Any

CHARACTERISTICS: Should be bright yellow color, uniform pieces, sweet-sour taste with strong pineapple flavor.

DEFECTS: Crushed or mushy pulp, fading or off-white color, heavy syrup, pitted or rusty liner, fermented (turning to wine).

SHELF LIFE: One (1) year unopened; seven (7) days opened.

HANDLING: Store in cool dry place. Keep product in syrup after opening. Refrigerate opened product at all times.

CONFIDENTIAL

INGREDIENT: Potato Chips

USAGE: Sandwiches

DESCRIPTION:

TYPE	Regular, Flat
STYLE	1/2 Ounce Portion Pack
GRADE	Individual
BRAND	Frito-Lay, Guys or Equivalent
NOTE:	The use of bulk chips is not permitted.

CHARACTERISTICS: The packages should be sealed and loose packed when received. Chips should be whole and unbroken. Color should be even light brown in color with even distribution of salt. Should be crisp and tender.

DEFECTS: Torn bags, rancid flavor, stale or soft texture.

SHELF LIFE: See Manufacturers expiration date.

HANDLING: Store in cool dry place. Do not stack.

CONFIDENTIAL

SHOWBIZ PIZZA PLACE

OPERATIONS MANUAL

Procedure # 11636
Title: Specifications
Potato Salad
Section: Specifications
Effective Date: 4-30-82

INGREDIENT: Potato Salad

USAGE: Salad Bar

DESCRIPTION:

TYPE	Mayonnaise or Mustard Base
STYLE	Diced Potatoes
GRADE	N/A
PACK	Tubs, Trays, Wax Cartons
BRAND	Orval Kent, Mrs. Giles, Alex, or equivalent

CHARACTERISTICS: Product should have smooth base with firm potato cubes.

DEFECTS: Separation of base, soft or mushy potatoes, expired production dates.

SHELF LIFE: Thirty (30) days total from date of manufacture. It is important to note expiration date on container and refuse product which has less than one week of usable life remaining at time of receipt.

HANDLING: Refrigerate product at all times. Close container after use. Rotate stock at least once per week. Place day old product on top of new--never new on old.

CONFIDENTIAL

SHOWBIZ PIZZA PLACE

OPERATIONS MANUAL

Procedure # 11640
Title: Specifications
Radishes
Section: Specifications
Effective Date: 4-30-82

INGREDIENT: Radishes

USAGE: Salad Bar

DESCRIPTION:

TYPE	Fresh
STYLE	N/A
GRADE	U.S. Fancy
PACK	8 oz. bags
BRAND	Any local purveyor

CHARACTERISTICS: Should be bright red, even in size, firm, crisp with a mild flavor. Tops, if attached, should be fresh and bright green.

DEFECTS: Large, irregular shaped, split or pithy, pulpy product.

SHELF LIFE: If received in good condition, seven (7) days under refrigeration.

HANDLING: Examine upon receipt and refuse produce which is unacceptable. Store under refrigeration as soon as possible. Product may be trimmed and stored in ice water if they become soft.

CONFIDENTIAL

INGREDIENT: Sweet Relish

USAGE: Condiment Bar

DESCRIPTION:

TYPE	Bulk or individual packets
STYLE	Sweet Cucumber, Pickle
GRADE	N/A
PACK	(4) One Gallon; 200 count packets
BRAND	Any

CHARACTERISTICS: Small uniform pieces, minimal separation of syrup, bright green color.

DEFECTS: Moldy, fermented, sour or vinegar taste.

SHELF LIFE: Six (6) months in cool dry place; fourteen (14) days after opening.

HANDLING: Store in cool dry place. Rotate stock regularly. Refrigerate after opening.

SHOWBIZ PIZZA PLACE

OPERATIONS MANUAL

INGREDIENT: Refried Beans

USAGE: Taco Pizza

DESCRIPTION:

TYPE	Canned
STYLE	N.A.
GRADE	N.A.
PACK	#303 cans; #10 cans only if sales warrant
BRAND	Any Canned

CHARACTERISTICS:

Product should be brown in color with some whole beans mixed in.

DEFECTS:

Dented or bulged cans, brownish in color, separation at the top of can, pitted or eroded liner.

SHELF LIFE:

One (1) year in cool dry place. Seven (7) days opened under refrigeration.

HANDLING:

Check material when received. Store in cool dry place.

SHOWBIZ PIZZA PLACE

OPERATIONS MANUAL

Procedure # 11643
Title: Red Wine Vinegar

Section: Specifications
Effective Date: 3-16-84

INGREDIENT: Red Wine Vinegar

USAGE: Salad Bar

DESCRIPTION:

TYPE	Wine vinegar
STYLE	N/A
GRADE	N/A
PACK	4/1 gallon
BRAND	Regina

CHARACTERISTICS: Red in color

DEFECTS: Broken jars

SHELF LIFE: Product should be stored in cool place.

HANDLING: Keep container closed at all times; rotate stock regularly.

CONFIDENTIAL

SHOWBIZ PIZZA PLACE

Procedure # 11650
Title: Specifications
Salami
Section: Specifications
Effective Date: 5-13-85

OPERATIONS MANUAL

INGREDIENT: Salami

USAGE: Submarine Sandwich

DESCRIPTION:

TYPE	Genoa
STYLE	Hard, Unsliced, 2½"-3" Diameter, Artificial Casing
GRADE	U.S.D.A.
PACK	3-5 lbs.
BRAND	Corporate locations: N/A Franchise locations: Hormel, #23159 Rath, #05101 Morrell, #02633 or equivalent

CHARACTERISTICS: Product should be moderately spicy and firm in texture. Should hold together well when slicing.

DEFECTS: Moldy, rancid, excessively fatty, slimy to the touch.

SHELF LIFE: Refer to expiration date if possible; thirty (30) days maximum after receipt.

HANDLING: Store under refrigeration at all times. Keep tightly wrapped.

INGREDIENT: Salt

USAGE: Kitchen and Dining Room

DESCRIPTION:

TYPE	N/A
STYLE	Granulated
GRADE	N/A
PACK	Bulk, 10-25 lb. bags (24) 1 lb. cans
BRAND	Any

CHARACTERISTICS: Free flowing, pure white.

DEFECTS: Caked or contaminated with dirt.

SHELF LIFE: Unlimited.

HANDLING: Store in cool dry place. Reclose opened containers. Rotate stock frequently during summer months.

CONFIDENTIAL

SHOWBIZ PIZZA PLACE

OPERATIONS MANUAL

Procedure # 11652.01
Title: Specifications
Sauce-Barbeque
Section: Specifications
Effective Date: 4-30-82

INGREDIENT: Barbeque Sauce

USAGE: Condiment Bar

DESCRIPTION:

TYPE	N/A
STYLE	Smoked
GRADE	N/A
PACK	(4) One Gallon Jars
BRAND	Cattleman's (French's)

CHARACTERISTICS: Should be dark reddish brown in color with distinct smoke flavor.

DEFECTS: Separation, blackened or dark brown surface of newly opened container.

SHELF LIFE: Six (6) months in cool dry place; fourteen (14) days for opened containers.

HANDLING: Store in cool dry place. Rotate stock regularly. Refrigerate after opening.

CONFIDENTIAL

SHOWBIZ PIZZA PLACE

OPERATIONS MANUAL

Procedure # 11652.02
Title: Specifications
Sauce-Horseradish
Section: Specifications
Effective Date: 4-30-82

INGREDIENT: Horseradish Sauce

USAGE: Condiment Bar

DESCRIPTION:

TYPE	Creamy
STYLE	Mild-Strong
GRADE	N/A
PACK	(12) 8 Oz. Bottles
BRAND	Tulkoffs Tiger Sauce or equivalent

CHARACTERISTICS: Off white, creamy with slight grainy texture.

DEFECTS: Separation.

SHELF LIFE: Six (6) months in cool dry place; fourteen (14) days after containers are opened.

HANDLING: Store in cool dry place. Rotate stock regularly. Refrigerate after opening.

CONFIDENTIAL

SHOWBIZ PIZZA PLACE

OPERATIONS MANUAL

Procedure # 11652.02
Title: Specifications
Sauce-Horseradish
Section: Specifications
Effective Date: 4-30-82

INGREDIENT: Horseradish Sauce

USAGE: Condiment Bar

DESCRIPTION:

TYPE	Creamy
STYLE	Mild-Strong
GRADE	N/A
PACK	(12) 8 Oz. Bottles
BRAND	Tulkoffs Tiger Sauce or equivalent

CHARACTERISTICS: Off white, creamy with slight grainy texture.

DEFECTS: Separation.

SHELF LIFE: Six (6) months in cool dry place; fourteen (14) days after containers are opened.

HANDLING: Store in cool dry place. Rotate stock regularly. Refrigerate after opening.

CONFIDENTIAL

INGREDIENT: ShowBiz Pizza Place Sauce

USAGE: Pizza Sauce

DESCRIPTION:

TYPE	Pre-Made, Canned Pizza Sauce
STYLE	N/A
GRADE	N/A
PACK	6 Number 10 Cans to the Case
BRAND	Carnation

CHARACTERISTICS: Should be thick but easily pourable. Deep red in color with small flecks of spices visible.

DEFECTS: Damaged cans, off odor.

SHELF LIFE: Five (5) days opened, one (1) years, unopened.

HANDLING: To use, open can and pour into make table insert. Open product must be stored in stainless steel or plastic inserts.

SHOWBIZ PIZZA PLACE

OPERATIONS MANUAL

Procedure # 11653
Title: Specifications
Sausage
Section: Specifications
Effective Date: 9-20-85

INGREDIENT: Precooked Sausage Topping, Code 20000152

USAGE: Pizza Topping

DESCRIPTION:

TYPE — Precooked, individually frozen

STYLE — Chunky #1 Size

GRADE — U.S.D.A.

PACK — 4-10 Lb. bags per carton

ANALYTICAL — based on finished product

Chemical:

Moisture	48 ± 3%
Fat	28 ± 3%
Protein	15 ± 2%
Salt	2.3 ± 3%

CONTENTS BY VOLUME

Pork	82.64
Water	8.02
T.V.P.	6.50
Spices, salt, sugar Flavorings and MSG	2.84

Microbiological properties:

Total Plate Count - 30,000 / gm.
Coliform - 10 / gm. Max.
Yeast and Mold - 50 / gm.
E. Coli - Negative
Staphylococcus (C.P.) - 50 / gm.
Clostridium Perfringens - 10 / gm.

INGREDIENT: ShowBiz Pizza Place, Inc. Spice Blend

USAGE: Pizza Sauce, F#908-0282

DESCRIPTION:

TYPE	Dry Spice Blend
STYLE	N/A
GRADE	N/A
PACK	Bags (24) 1 lb., 12 oz. per case
BRAND	Griffith Laboratories, 12200 S. Central Avenue, Alsip, Illinois 60658

CHARACTERISTICS: This product is a blend of seven spices. It is a free flowing mixture. Label should read:

Net Weight 1 Lb. 12 Ozs.
Pizza Sauce
F#908-0282

Processed from sugar, monosodium glutamate, spices, and garlic powder.

Production Code Date

DEFECTS: Product is lumpy or caked. Bags are torn or seal is broken.

SHELF LIFE: Six (6) months when stored in cool dry place.

HANDLING: Store in air conditioned area or under refrigeration if humidity is excessively high (over 60%).

CONFIDENTIAL

SHOWBIZ PIZZA PLACE

OPERATIONS MANUAL

Procedure # 11656
Title: Specifications
Spinach, Leaf
Section: Specifications
Effective Date: 4-30-82

INGREDIENT: Spinach, Leaf

USAGE: Salad Bar

DESCRIPTION:

TYPE	Fresh
STYLE	Leaf
GRADE	U.S. Fancy Grade A
PACK	8 to 10 oz.
BRAND	Any Local Produce Purveyor

CHARACTERISTICS: Should be bright, dark green in color and have crisp firm leaves with stems attached.

DEFECTS: Wilted, brown rot, moldy, excessive dirt or broken stems, yellow-green leaves.

SHELF LIFE: Three (3) days under refrigeration.

HANDLING: Each package should be examined upon receipt. Refuse product which appears defective. Place under refrigeration. Do not stack other items on top of spinach. Rotate stock frequently.

CONFIDENTIAL

SHOWBIZ PIZZA PLACE

OPERATIONS MANUAL

Procedure # 11657
Title: Specifications
Sweetener
Section: Specifications
Effective Date: 4-30-82

INGREDIENT: Sweetener

USAGE: Beverage Station

DESCRIPTION:

TYPE	Saccharin
STYLE	Powder
GRADE	N/A
PACK	1 Gram Pouches
BRAND	Sweet N' Low. (Will be private label packed by any number of distributors. Should be available from local distributor under house brand.)

CHARACTERISTICS: Bright white, free flowing.

DEFECTS: Caked or lumpy.

SHELF LIFE: One (1) year.

HANDLING: Keep in cool dry place. Rotate stock regularly.

CONFIDENTIAL

SHOWBIZ PIZZA PLACE

OPERATIONS MANUAL

Procedure # 11658
Title: Sunflower Seeds

Section: Specifications
Effective Date: 3-16-84

INGREDIENT: Sunflower Seeds

USAGE: Salad Bar

DESCRIPTION:

TYPE	Institutional Pack
STYLE	N/A
GRADE	N/A
PACK	5# tin
BRAND	N/A

CHARACTERISTICS: Dry Pack

DEFECTS: Open containers - moldy

SHELF LIFE:

HANDLING: Store at room temperature in tightly covered container.

CONFIDENTIAL

INGREDIENT: Tea, Hot

USAGE: Beverage Station

DESCRIPTION:

TYPE	Fresh
STYLE	Flow Thru
GRADE	Orange Pekoe
PACK	Individual Cup Portion Packs
BRAND	Corporate locations: La Tourine, Farmer Brothers Franchise locations: La Tourine, Farmer Brothers, or equivalent

CHARACTERISTICS: Should be conventional, one cup flow thru tea bags. Should have typical tea aroma and flavor.

DEFECTS: Old product will be stale and will lack flavor and aroma.

SHELF LIFE: One (1) month.

HANDLING: Product is to be rotated weekly by DineMor Foods representative. Insist on regular rotation. See recipe book for brewing procedure.

INGREDIENT: Tea, Iced

USAGE: Beverage

DESCRIPTION:

TYPE	Fresh
STYLE	Orange Pekoe
GRADE	N/A
PACK	1 oz. Pouches
BRAND	Corporate locations: La Tourine, Farmer Brothers Franchise locations: La Tourine, Farmer Brothers or equivalent

CHARACTERISTICS: Product is packaged in flow thru 1 oz. pouches. This is a free flowing mixture which should have a rich tea aroma.

DEFECTS: Old product will lack aroma and flavor when hot brewed.

SHELF LIFE: One (1) month.

HANDLING: Product is to be rotated weekly by the DineMor Foods representative. Insist on regular inventory rotation. See recipe book for brewing procedure.

SHOWBIZ PIZZA PLACE

OPERATIONS MANUAL

Procedure # 11661.01
Title: Specifications
Tomatoes - Fresh
Section: Specifications
Effective Date: 4-30-82

INGREDIENT: Tomato

USAGE: Pizza, Sandwiches, Salad Bar

DESCRIPTION:

TYPE	Fresh, ripe
STYLE	Whole
GRADE	U.S. Fancy, Grade A, "Light Red"
PACK	6 x 6, 2½" to 2-3/4" diameter, 2 Layer
BRAND	Any Local Produce Purveyor

CHARACTERISTICS: Firm, red and uniform in color. Smooth, shiny skin with absence of bruises, yellow spots and scars. Free from dirt, stems or insect infestation.

DEFECTS: Soft, (does not slice and hold flesh to walls), scars, insect infestation, mold, dirt, skin cracks.

SHELF LIFE: Order as often as possible each week, but at least twice per week. Red ripes will have only 3-5 days.

HANDLING: Refrigerate as soon as received. Keep in shipping container until used. See Job Aid for preparation.

CONFIDENTIAL

INGREDIENT: Tomato Paste

USAGE: Pizza Sauce

DESCRIPTION:

TYPE	Canned
STYLE	Paste, 26 - 28% Solids
GRADE	A, U.S. Fancy
PACK	6 #10 Cans
BRAND	Hunt Wesson, H.J. Heinz, Contadina, House Brand

CHARACTERISTICS: Product should be thick, creamy, deep red color with rich tomato flavor and slightly acid flavor.

DEFECTS: Dented or bulged cans, brownish in color, separation at the top of can, pitted or eroded liner.

SHELF LIFE: One (1) year in cool dry place.

HANDLING: Check material when received. Store in cool dry place. Rotate stock.

NOTE: The use of imported paste is not permitted unless first evaluated by the Food Standards Department of ShowBiz Pizza Place, Inc.

CONFIDENTIAL

SHOWBIZ PIZZA PLACE

OPERATIONS MANUAL

Procedure # 11661.03
Title: Cherry Tomatoes

Section: Specifications
Effective Date: 3-16-84

INGREDIENT: Cherry Tomatoes

USAGE: Salad Bar

DESCRIPTION:

TYPE	Fresh Ripe
STYLE	Cherry
GRADE	U.S. Fancy Grade A, Light Red
PACK	12 pint flat - 16# net - 18# gross
BRAND	Any local produce purveyor

CHARACTERISTICS: Good red color, well formed 1" to 1½" in diameter, free from decay.

DEFECTS: Soft, scars, insect infestation, mold, dirt and skin cracks.

SHELF LIFE: Order as often as possible each week, but at least twice per week. Red ripes will have only 5-7 days.

HANDLING: Refrigerate as soon as possible. Keep in shipping container until used.

CONFIDENTIAL

INGREDIENT: Butterscotch Topping

USAGE: Ice Cream Sundae

DESCRIPTION:

TYPE	Canned
STYLE	Thick and Creamy
GRADE	N/A
PACK	6 #10 or 6 #5 Cans
BRAND	Hersheys, Hungerfords, Lyons Magnus or equivalent

CHARACTERISTICS: Product should be smooth, creamy and shiny in texture with rich butterscotch flavor and light brown or caramel color.

DEFECTS: Stiff, unpourable, dull appearance, streaks of or uneven colors, granular separation at the bottom.

SHELF LIFE: One (1) year unopened.

HANDLING: Product is to be kept in cool dry place. After opening keep well covered with tight fitting cover and refrigerate.

CONFIDENTIAL

INGREDIENT: Fudge Topping

USAGE: Ice Cream Sundae

DESCRIPTION:

TYPE	Canned
STYLE	Smooth and Creamy
GRADE	N/A
PACK	6 #10 or #5 Cans
BRAND	Hersheys, Hungersford, Lyons Magnus, or equivalent

CHARACTERISTICS: Should be dark cocoa brown color, with rich chocolate flavor, smooth glossy sheen and smooth creamy texture.

DEFECTS: Lumps, moldy, grainy, dull sheen, grayish color, separation of oil.

SHELF LIFE: One (1) year unopened; seven (7) days opened.

HANDLING: Product is to be stored in cool dry place. After can is opened, it must be protected at all times against moisture contamination. Either keep hot or in tightly closed container under refrigeration.

CONFIDENTIAL

INGREDIENT: Strawberry Topping

USAGE: Ice Cream Sundae

DESCRIPTION:

TYPE	Canned
STYLE	Crushed Strawberries in Heavy Syrup
GRADE	N/A
PACK	6 #5 Cans/Case
BRAND	Hersheys, Hungersford, Lyons Magus, or equivalent

CHARACTERISTICS: Berries should be bright red in color with rich sweet strawberry flavor.

DEFECTS: Darkened strawberry color, sour taste or a fermenting yeasty odor, granular separation of sugar to the bottom. Bulged or dented cans.

SHELF LIFE: One (1) year unopened; five (5) days opened and refrigerated.

HANDLING: Product is to be kept in cool dry place. After opening keep well covered with tight fitting cover and refrigerate.

CONFIDENTIAL

SHOWBIZ PIZZA PLACE

OPERATIONS MANUAL

Procedure # 11663
Title: Specifications
Turkey
Section: Specifications
Effective Date: 5-13-85

INGREDIENT: Turkey Breast

USAGE: Sandwich

DESCRIPTION:

TYPE	Cooked Whole or Half Breast
STYLE	Boneless
GRADE	U.S.D.A. Grade A
PACK	Cryovac, 4-7 lbs.
BRAND	Corporate locations: N/A Franchise locations: Jennie-O, Land-O-Lakes, Tyson, Ralston, Purina, Louis Rich or Equivalent

CHARACTERISTICS: This turkey breast should be the precooked whole boned breast with the skin on. The color should be very even white with absence of blood clots or bruises. Flavor should be lightly seasoned, moist and tender.

DEFECTS: Ruptured skin, torn package, bruised flesh, blood clots, spoiled flavor or odor, over-cooked and dry.

SHELF LIFE: Six (6) months frozen, five (5) days thawed or three (3) days opened and thawed.

HANDLING: Keep frozen. Thaw under refrigeration for 48 hours. Accept only product which is frozen.

SHOWBIZ PIZZA PLACE

OPERATIONS MANUAL

Procedure # 11664
Title: Specifications
Tortilla Chips
Section: Specifications
Effective Date: 1-17-83

INGREDIENT: Tortilla or Taco Chips

USAGE: Nacho Platter

DESCRIPTION:

TYPE	Bagged
STYLE	Round
PACK	1 lb bulk bags
BRAND	Frito Lay or Bordens

CHARACTERISTICS: Round Chips lightly salted. Should be crisp and unbroken.

DEFECTS: Ripped or crushed bags, with broken chips. Stale or moldy chips.

SHELF LIFE: Refer to expiration date on manufacturers bag.

HANDLING: Store in dry place. Avoid handling to reduce breakage. After opening store in air tight container.

CONFIDENTIAL

SHOWBIZ PIZZA PLACE

OPERATIONS MANUAL

Procedure # 11665
Title: Specifications
Taco Flavored Dorritos or Chips
Section: Specifications
Effective Date: 12-30-83

INGREDIENT:

Taco Flavored Dorritos or Chips

USAGE:

Taco Pizza

DESCRIPTION:

TYPE	Bagged
STYLE	Triangle or Round
GRADE	N.A.
PACK	One (1) pound bulk bags
BRAND	Any brand

CHARACTERISTICS:

Round or triangular, seasoned with Taco Seasoning. Should be crisp.

DEFECTS:

Broken open bags that are stale.

SHELF LIFE:

Refer to expiration date on manufacturer's bag.

HANDLING:

Store in dry place. After opening, store in air tight container.

CONFIDENTIAL

SHOWBIZ PIZZA PLACE

OPERATIONS MANUAL

Procedure # 11666
Title: Three Bean Salad

Section: Specifications
Effective Date: 3-16-84

INGREDIENT: Three Bean Salad

USAGE: Salad Bar

DESCRIPTION:

TYPE	Canned, cooked
STYLE	N/A
GRADE	A
PACK	#10 cans
BRAND	

CHARACTERISTICS:

DEFECTS: Severely dented cans

SHELF LIFE: One year unopened - three days opened, covered and refrigerated.

HANDLING: Rotate stock regularly.

CONFIDENTIAL

INGREDIENT: Wine

USAGE: Beverage Station

DESCRIPTION:

TYPE	Red, Rose
STYLE	Burgundy
GRADE	N/A
PACK	3 Liter Bottles
BRAND	Cella, Lambrusco and Rosato

CHARACTERISTICS: Wine should be dark, deep red-burgundy color, slightly sweet and lightly effervescent.

DEFECTS: Flat, sour or vinegared, sediment on bottom.

SHELF LIFE: One (1) year unopened stored in dark place. Five (5) days after opening and under refrigeration.

HANDLING: Store in cool dark place. Reclose containers at all times to avoid odor contamination.

CONFIDENTIAL

INGREDIENT: Wine

USAGE: Beverage

DESCRIPTION:

TYPE	White, Domestic
STYLE	Cella Bianco
GRADE	N/A
PACK	3 Liter Bottles
BRAND	Cella Bianco

CHARACTERISTICS: Should be crystal clear, light golden color. Moderate fruity aroma and slightly dry.

DEFECTS: Sediment on bottom, cloudy, sour vinegar flavor.

SHELF LIFE: One (1) year stored in dark cool place. Seven (7) days after opened.

HANDLING: Store in cool dark place. After opening, store under refrigeration. Keep closed to avoid pick up of odors.

CONFIDENTIAL

SHOWBIZ PIZZA PLACE

OPERATIONS MANUAL

Procedure # 11900
Title: Specifications
Aluminum Foil
Section: Specifications
Effective Date: 4-30-82

INGREDIENT: Aluminum Foil

USAGE: Sandwiches

DESCRIPTION:

TYPE	Institutional Potato Wraps
STYLE	10" x 12", minimum
PACK	250-500 Per Box
BRAND	Any

NOTE: Light gauge 12" roll foil is permissable but not recommended as it will be more costly.

CONFIDENTIAL

SHOWBIZ PIZZA PLACE

OPERATIONS MANUAL

Procedure # 11910.01
Title: Specifications
Box - Carry Out
Section: Specifications
Effective Date: 4-30-82

ITEM: Carry Out Box

USAGE: To Go Pizza

DESCRIPTION: The box is constructed of 175 Lb. spray white corrugated paper. Plain inside. It is to be used for carry out pizza.

SIZE 14½ X 14½ X 1½" Inside Dimension

PACK 50 per carton

MFG Stone Container.

CODE

SPECIAL PRINTING The top of the carton shall have the ShowBiz Pizza Place logo printed in Pantone 185 Red. Reheat instructions are to be printed on top cover and shall read:

SHOWBIZ PIZZA PLACE℠

TO REHEAT: PREHEAT OVEN TO 450° F.
PLACE PIZZA ON COOKIE SHEET OR FOIL.
HEAT FOR 6 - 8 MINUTES.

CONFIDENTIAL

SHOWBIZ PIZZA PLACE

OPERATIONS MANUAL

Procedure # 11910.02
Title: Specifications
Box - Carry Out
Section: Specifications
Effective Date: 4-30-82

ITEM: Carry Out Box

USAGE: To Go Pizza

DESCRIPTION: The box is constructed of 175 Lb. spray white corrugated paper. Plain inside. It is to be used for carry out pizza.

SIZE	12¼ X 12¼ X 1½" Inside Dimension
PACK	50 per carton
MFG	Stone Container.
CODE	
SPECIAL PRINTING	The top of the carton shall have the ShowBiz Pizza Place logo printed in Pantone 185 Red. Reheat instructions are to be printed on top cover and shall read:

SHOWBIZ PIZZA PLACE℠

TO REHEAT: PREHEAT OVEN TO 450° F.
PLACE PIZZA ON COOKIE SHEET OR FOIL.
HEAT FOR 6 - 8 MINUTES.

CONFIDENTIAL

SHOWBIZ PIZZA PLACE

OPERATIONS MANUAL

Procedure # 11910.03
Title: Specifications
Box - Carry Out
Section: Specifications
Effective Date: 4-30-82

ITEM: Carry Out Box

USAGE: To Go Pizza

DESCRIPTION: The box is constructed of 175 Lb. spray white corrugated paper. Plain inside. It is to be used for carry out pizza.

SIZE 10¼ X 10¼ X 1½" Inside Dimension

PACK 100 per carton

MFG Stone Container.

CODE

SPECIAL PRINTING The top of the carton shall have the ShowBiz Pizza Place logo printed in Pantone 185 Red. Reheat instructions are to be printed on top cover and shall read:

SHOWBIZ PIZZA PLACE

TO REHEAT: PREHEAT OVEN TO 450° F.
PLACE PIZZA ON COOKIE SHEET OR FOIL.
HEAT FOR 6 - 8 MINUTES.

CONFIDENTIAL

SHOWBIZ PIZZA PLACE

OPERATIONS MANUAL

Procedure # 11910.04
Title: Specifications "To Go" Box
Section: Specifications
Effective Date: 4-30-82

ITEM: Styrofoam "To Go" Box

USAGE: Sandwiches

DESCRIPTION:

TYPE	Styrofoam, One Piece, Hinged
SIZE	7" x 8" x 3" Deep
PACK	500 Per Carton
BRAND	Any
SPECIAL PRINTING	None

CONFIDENTIAL

SHOWBIZ PIZZA PLACE

OPERATIONS MANUAL

Procedure # 11911.01
Title: Specifications
Cup - Cold
Section: Specifications
Effective Date: 4-30-82

ITEM: Cold Cup

USAGE: Soft Drinks

DESCRIPTION: The cup is made from paper. It has rolled rim and full side seam. The inside and outside are coated with petroleum wax.

SIZE	12 Oz.
PACK	2400 per case
MFG	Dixie Marathon
CODE	#348-1037 DV
SPECIAL PRINTING	Cup to be printed with approved logo below. Both sides. Color to be Pantone 185 Red.

NOTE: This item is purchased from Dixie Marathon under contract. No other container is permitted while this contract is binding without permission from the Food Standards and Controls Department of ShowBiz Pizza Place, Inc.

CONFIDENTIAL

SHOWBIZ PIZZA PLACE
OPERATIONS MANUAL

ITEM: Cold Cup

USAGE: Soft Drinks

DESCRIPTION: The cup is made from paper. It has rolled rim and full side seam. The inside and outside are coated with petroleum wax.

SIZE	16 Oz.
PACK	1000 per case
MFG	Dixie Marathon
CODE	120XX-1412
SPECIAL PRINTING	Cup to be printed with approved logo below. Both sides. Color to be Pantone 185 Red.

NOTE: This item is purchased from Dixie Marathon under contract. No other container is permitted while this contract is binding withoug permission from the Food Standards and Controls Department of ShowBiz Pizza Place, Inc.

CONFIDENTIAL

SHOWBIZ PIZZA PLACE

OPERATIONS MANUAL

Procedure # 11911.03
Title: Specifications
Cup - Hot
Section: Specifications
Effective Date: 4-30-82

ITEM: Hot Cup

USAGE: Coffee

DESCRIPTION: The cup is made from paper. It has rolled rim and full side seam. The inside has a bonded poly liner.

SIZE	8 Oz.	3" dia. at the top 3½" high
PACK	1000 per case	
MFG	Dixie Marathon	
CODE	2338-1033AN	
SPECIAL PRINTING	Cup to be printed with approved logo below. Both sides. Color to be Pantone 185 Red.	

NOTE: This item is purchased from Dixie Marathon under contract. No other container is permitted while this contract is binding without permission from the Food Standards and Controls Department of ShowBiz Pizza Place, Inc.

CONFIDENTIAL

SHOWBIZ PIZZA PLACE

OPERATIONS MANUAL

Procedure # 11930
Title: Specifications
Glass, Beer
Section: Specifications
Effective Date: 4-30-82

ITEM: Beer Glass

USAGE: Beverage Station

DESCRIPTION: This glass is constructed of polystyrene and is used for serving beer to the guest. It is translucent to clear.

SIZE: 16 oz. to the rim

PACK: 1000 per case

MFG: Dixie Marathon
Solo Cup #P-125
Lilly Tulip 14-16

SPECIAL PRINTING: None

NOTE: This glass should be sized such that it will hold 14 oz. of beer with a 3/4" head. It will often be referred to as a "16 oz.", a "14-16 oz.", or "16 oz. to the rim".

CONFIDENTIAL

ITEM: Pizza plate

USAGE: Pizza Service

DESCRIPTION: This plate is made of white paper point board and is to be used as a pizza plate offered to the customer at the pickup window.

SIZE	6" X 9" with ½" radius corners, .0195 thickness, polycoat
PACK	500 per case
MFG	Dixie Marathon
CODE	697P-1001
SPECIAL PRINTING	Plate to be printed with "Billy Bob's Pizza Plate" and wax coated. Printing to be diagonal across the plate at a 30° slant in Pantone 185 Red.

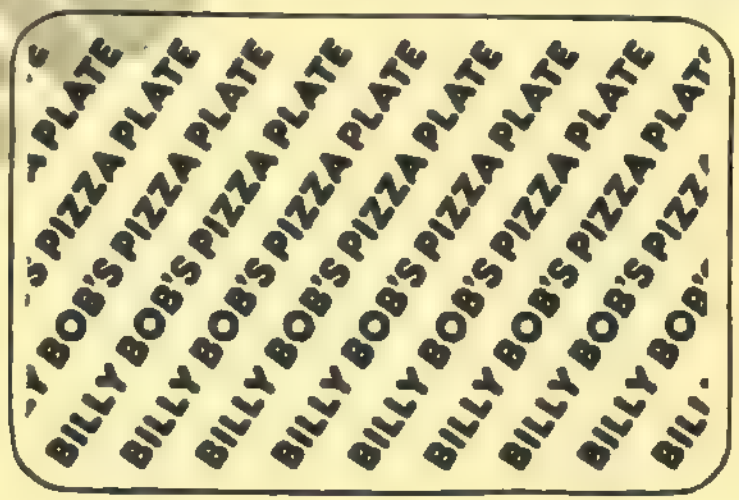

NOTE: This item is purchased under contract from Dixie Marathon. No other product is permitted unless approved by the Food Standards and Controls Department of ShowBiz Pizza Place, Inc.

CONFIDENTIAL

SHOWBIZ PIZZA PLACE

OPERATIONS MANUAL

Procedure # 11940.02
Title: Specifications
Plate, Salad
Section: Specifications
Effective Date: 4-30-82

ITEM: Salad Plate

USAGE: Salad Service

DESCRIPTION: This plate is constructed of bleached pressed paper fiber. It is treated with a repellent to retard soakage and penetration. The plate shall be used for the small salad.

SIZE	6 3/4" round by 5/8" deep
PACK	1000 per case
MFG	Keyes Fiber
CODE	21616
SPECIAL PRINTING	This plate shall have "ShowBiz Pizza Place" printed on the top rim of the plate. Color of printing to be Pantone 185 Red.

NOTE: This product is purchased under contract from Keyes Fiber. No other container is permitted without permission from the Food Standards and Controls Department of ShowBiz Pizza Place, Inc.

CONFIDENTIAL

ITEM: Platter

USAGE: Food Service

DESCRIPTION: This plate is constructed of bleached pressed paper fiber. It is treated with a repellent to retard soakage and penetration. The plate shall be used for the large salad and sandwiches.

SIZE	7½" X 10" Oval by 5/8" deep
PACK	500 per case
MFG	Keyes Fiber
CODE	21617
SPECIAL PRINTING	This plate shall have "ShowBiz Pizza Place" printed on the top rim of the plate. Color of printing to be Pantone 185 Red.

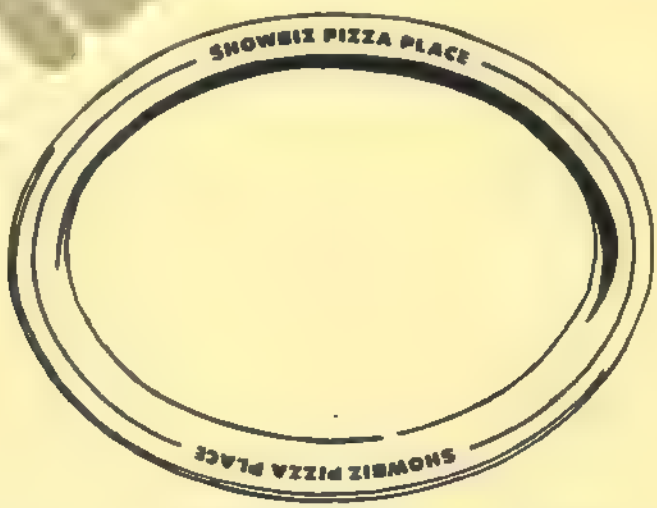

NOTE: This product is purchased under contract from Keyes Fiber. No other container is permitted without permission from the Food Standards and Controls Department of ShowBiz Pizza Place, Inc.

CONFIDENTIAL

SHOWBIZ PIZZA PLACE

OPERATIONS MANUAL

Procedure # 11945
Title: Specifications
Sandwich Picks
Section: Specifications
Effective Date: 4-30-82

ITEM: Sandwich Picks

USAGE: Sandwiches

DESCRIPTION:

TYPE	Cello Topped or Frill Packs, Assorted Colors
SIZE	4" Long
PACK	1000 Per Box
BRAND	Any
NOTE:	Under no circumstances are plain or shorter picks to be used. They can be dangerous to the customer.

CONFIDENTIAL

INGREDIENT: Beer

USAGE: Beverage Station

DESCRIPTION:

TYPE	Draft
STYLE	Premium
GRADE	N/A
PACK	15½ Gallon Barrel (Keg) Note: 1 gallon = 128 oz.
BRAND	Local brand approved by Showbiz Pizza Place, Inc.

CHARACTERISTICS: Product will be full bodied, with rich beer flavor and definite carbonation.

DEFECTS: Product is stale, lacks carbonation and will not hold proper head.

SHELF LIFE: Three (3) weeks under constant refrigeration.

HANDLING: Refrigerate as soon as received. Do not tap until needed. Store under 40° F. Store away from door to walk-in. Rotate weekly.

CONFIDENTIAL

INGREDIENT: Beer

USAGE: Beverage Station

DESCRIPTION:

TYPE	Draft
STYLE	Low Calorie
GRADE	N/A
PACK	15½ Gallon Barrel (Keg) Note: 1 gallon = 128 oz.
BRAND	Local brand approved by ShowBiz Pizza Place, Inc.

CHARACTERISTICS: Should be crystal clear, cold, with yellowish color. Distinct beer flavor with definite carbonation. Will not be as full bodied as regular.

DEFECTS: Product is stale, lacks carbonation and cloudy. Will not hold proper head.

SHELF LIFE: Three (3) weeks under constant refrigeration.

HANDLING: Refrigerate as soon as it is received. Do not tap until needed. Keep temperature below 40° F. Store away from door to walk-in. Rotate weekly.

CONFIDENTIAL

INGREDIENT: Beer

USAGE: Beverage Station

DESCRIPTION:

TYPE	Draft
STYLE	Regular
GRADE	N/A
PACK	15½ Gallon Barrel (Keg) Note: 1 gallon - 128 oz.
BRAND	Local brand approved by ShowBiz Pizza Place, Inc.

CHARACTERISTICS: Should be crystal clear, cold, with yellowish color. Distinct beer flavor with definite carbonation.

DEFECTS: Product is stale, lacks carbonation and cloudy. Will not hold proper head.

SHELF LIFE: Three (3) weeks under constant refrigeration.

HANDLING: Refrigerate as soon as it is received. Do not tap until needed. Keep temperature below 40° F. Store away from door to walk-in. Rotate weekly.

CONFIDENTIAL

SHOWBIZ PIZZA PLACE

OPERATIONS MANUAL

Procedure # 11960
Title: Specifications
Coconut Oil Bar
Section: Specifications
Effective Date: 4-30-82

INGREDIENT: Coconut Oil Bar

USAGE: Popcorn

DESCRIPTION:

TYPE	Mixture of Coconut Oil, Partially Hydrogenated Soy Bean and Cottonseed Oil
STYLE	Solid, 1/4 Lb. or 4 Oz. Bars
GRADE	4 Sticks or Bars per Package
PACK	"Coco-Pop", Louana Foods, Inc.

CHARACTERISTICS: This product should be a dark yellowish color, darker than butter and lightly seasoned, with rich butter flavor.

DEFECTS: Oil separation, rancid flavor.

SHELF LIFE: Six (6) months in cool dry place.

HANDLING: Store in cool dry place or walk-in. Rotate stock monthly.

COPY

SHOWBIZ PIZZA PLACE

OPERATIONS MANUAL

Procedure # 11970
Title: Specifications
Flavacol
Section: Specifications
Effective Date: 4-30-82

INGREDIENT: Flavacol

USAGE: Popcorn Seasoning

DESCRIPTION:

TYPE	Flavacol
STYLE	Granular
GRADE	N/A
PACK	(12) 35 Oz. Waxed Cartons/Case
BRAND	Gold Medal

CHARACTERISTICS: Product should be free flowing and bright orange in color.

DEFECTS: Caked, lack of viable seasoning.

SHELF LIFE: Twelve (12) months in dry cool storage.

HANDLING: Cartons should be reclosed after each use. Keep in cool dry place. Do not refrigerate.

CONFIDENTIAL

SHOWBIZ PIZZA PLACE

OPERATIONS MANUAL

Procedure # 11980
Title: Specifications
Popcorn
Section: Specifications
Effective Date: 4-30-82

INGREDIENT: Popcorn

USAGE: Popcorn

DESCRIPTION:

TYPE	Large kernel
STYLE	Yellow
PACK	Smallest Possible
MOISTURE	13.5 ± .2%
EXPANSION	38:1 minimum

CHARACTERISTICS: Kernels should be uniform in color and size. The containers should be tightly closed upon receipt.

DEFECTS: Irregular shapes, uneven color, excess of tailings or fragments, moldy, dirty.

SHELF LIFE: Under refrigeration, three (3) months. In cool, dry storage, one (1) month.

HANDLING: When product is received, it should be examined for torn or broken containers. These should be refused and returned to supplier. Always store in cool, dry place. Opened containers should be put into a reclosable container such as plastic with snap on lid.

CONFIDENTIAL

SHOWBIZ PIZZA PLACE

OPERATIONS MANUAL

Procedure # 11985
Title: Birthday Candles

Section: Specifications
Effective Date: 11-22-82

ITEM: Birthday Candle #1525 YB

USAGE: Birthday Cakes

DESCRIPTION:

Medium Spiral Birthday Candles

CODE	#1525 YB
SIZE	1/4" x 2 1/2" Long
COLOR	Yellow
MATERIAL	Paraffin Wax
WEIGHT	320 candles per lb. ± 1%
PACK	500 candles per box - 3000 case

CHARACTERISTICS: Candles should be of uniform construction with a consistent yellow color.

DEFECTS: Irregular color or sizes. Melted or fused together. Broken candles.

SHELF LIFE: Indefinite

HANDLING: Do not crush, drop or store in a hot place.

CONFIDENTIAL

SPP OPERATIONS MANUAL: SPECIFICATIONS

Date of Origin: 1982-1986
Archived: 12-30-17
Submission by Sptweb
Version 1.0

The documents contained herein are for educational use only. Please do not replicate, redistribute, or make any unauthorized printings. All intellectual property including characters, artwork, photography, and slogans are trademark and/or copyright their respective owners.